Full wwPDB X-ray Structure Validation Report (i)

Dec 13, 2023 – 06:34 am GMT

PDB ID	:	3ZHP
Title	:	Human MST3 (STK24) in complex with MO25beta
Authors	:	Elkins, J.M.; Szklarz, M.; Krojer, T.; Mehellou, Y.; Alessi, D.R.; Chaikaud, A.; von Delft, F.; Bountra, C.; Edwards, A.; Knapp, S.
Deposited on	:	2012-12-24
Resolution	:	2.90 Å(reported)

This is a Full wwPDB X-ray Structure Validation Report for a publicly released PDB entry.

We welcome your comments at *validation@mail.wwpdb.org*
A user guide is available at
https://www.wwpdb.org/validation/2017/XrayValidationReportHelp
with specific help available everywhere you see the (i) symbol.

The types of validation reports are described at
http://www.wwpdb.org/validation/2017/FAQs#types.

The following versions of software and data (see references (i)) were used in the production of this report:

MolProbity	:	4.02b-467
Mogul	:	1.8.4, CSD as541be (2020)
Xtriage (Phenix)	:	1.13
EDS	:	2.36
Percentile statistics	:	20191225.v01 (using entries in the PDB archive December 25th 2019)
Refmac	:	5.8.0158
CCP4	:	7.0.044 (Gargrove)
Ideal geometry (proteins)	:	Engh & Huber (2001)
Ideal geometry (DNA, RNA)	:	Parkinson et al. (1996)
Validation Pipeline (wwPDB-VP)	:	2.36

1 Overall quality at a glance (i)

The following experimental techniques were used to determine the structure:
X-RAY DIFFRACTION

The reported resolution of this entry is 2.90 Å.

Percentile scores (ranging between 0-100) for global validation metrics of the entry are shown in the following graphic. The table shows the number of entries on which the scores are based.

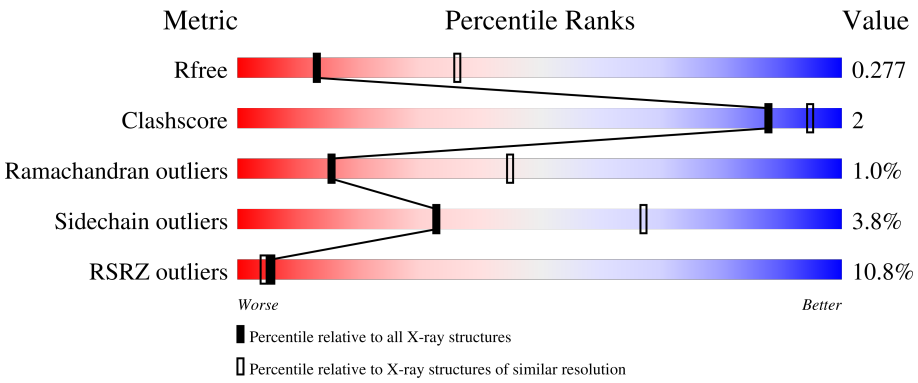

Metric	Whole archive (#Entries)	Similar resolution (#Entries, resolution range(Å))
R_{free}	130704	1957 (2.90-2.90)
Clashscore	141614	2172 (2.90-2.90)
Ramachandran outliers	138981	2115 (2.90-2.90)
Sidechain outliers	138945	2117 (2.90-2.90)
RSRZ outliers	127900	1906 (2.90-2.90)

The table below summarises the geometric issues observed across the polymeric chains and their fit to the electron density. The red, orange, yellow and green segments of the lower bar indicate the fraction of residues that contain outliers for >=3, 2, 1 and 0 types of geometric quality criteria respectively. A grey segment represents the fraction of residues that are not modelled. The numeric value for each fraction is indicated below the corresponding segment, with a dot representing fractions <=5% The upper red bar (where present) indicates the fraction of residues that have poor fit to the electron density. The numeric value is given above the bar.

Mol	Chain	Length	Quality of chain
1	A	340	7%, 85%, 7%, 7%
1	B	340	12%, 84%, 8%, 7%
2	C	294	3%, 84%, 9%, 7%
2	D	294	17%, 82%, 8%, 10%

2 Entry composition (i)

There are 3 unique types of molecules in this entry. The entry contains 8807 atoms, of which 0 are hydrogens and 0 are deuteriums.

In the tables below, the ZeroOcc column contains the number of atoms modelled with zero occupancy, the AltConf column contains the number of residues with at least one atom in alternate conformation and the Trace column contains the number of residues modelled with at most 2 atoms.

- Molecule 1 is a protein called CALCIUM-BINDING PROTEIN 39-LIKE.

Mol	Chain	Residues	Atoms					ZeroOcc	AltConf	Trace
			Total	C	N	O	S			
1	A	315	2410	1574	390	438	8	0	0	0
1	B	315	2422	1574	395	444	9	0	0	0

There are 14 discrepancies between the modelled and reference sequences:

Chain	Residue	Modelled	Actual	Comment	Reference
A	-2	GLY	-	expression tag	UNP Q9H9S4
A	-1	PRO	-	expression tag	UNP Q9H9S4
A	0	LEU	-	expression tag	UNP Q9H9S4
A	1	GLY	-	expression tag	UNP Q9H9S4
A	2	SER	-	expression tag	UNP Q9H9S4
A	3	MET	-	expression tag	UNP Q9H9S4
A	4	LEU	-	expression tag	UNP Q9H9S4
B	-2	GLY	-	expression tag	UNP Q9H9S4
B	-1	PRO	-	expression tag	UNP Q9H9S4
B	0	LEU	-	expression tag	UNP Q9H9S4
B	1	GLY	-	expression tag	UNP Q9H9S4
B	2	SER	-	expression tag	UNP Q9H9S4
B	3	MET	-	expression tag	UNP Q9H9S4
B	4	LEU	-	expression tag	UNP Q9H9S4

- Molecule 2 is a protein called SERINE/THREONINE-PROTEIN KINASE 24.

Mol	Chain	Residues	Atoms					ZeroOcc	AltConf	Trace
			Total	C	N	O	S			
2	C	272	2042	1317	324	396	5	0	0	0
2	D	264	1913	1230	303	375	5	0	0	0

There are 46 discrepancies between the modelled and reference sequences:

Chain	Residue	Modelled	Actual	Comment	Reference
C	-4	MET	-	expression tag	UNP Q9Y6E0
C	-3	HIS	-	expression tag	UNP Q9Y6E0
C	-2	HIS	-	expression tag	UNP Q9Y6E0
C	-1	HIS	-	expression tag	UNP Q9Y6E0
C	0	HIS	-	expression tag	UNP Q9Y6E0
C	1	HIS	-	expression tag	UNP Q9Y6E0
C	2	HIS	-	expression tag	UNP Q9Y6E0
C	3	SER	-	expression tag	UNP Q9Y6E0
C	4	SER	-	expression tag	UNP Q9Y6E0
C	5	GLY	-	expression tag	UNP Q9Y6E0
C	6	VAL	-	expression tag	UNP Q9Y6E0
C	7	ASP	-	expression tag	UNP Q9Y6E0
C	8	LEU	-	expression tag	UNP Q9Y6E0
C	9	GLY	-	expression tag	UNP Q9Y6E0
C	10	THR	-	expression tag	UNP Q9Y6E0
C	11	GLU	-	expression tag	UNP Q9Y6E0
C	12	ASN	-	expression tag	UNP Q9Y6E0
C	13	LEU	-	expression tag	UNP Q9Y6E0
C	14	TYR	-	expression tag	UNP Q9Y6E0
C	15	PHE	-	expression tag	UNP Q9Y6E0
C	16	GLN	-	expression tag	UNP Q9Y6E0
C	17	SER	-	expression tag	UNP Q9Y6E0
C	18	MET	-	expression tag	UNP Q9Y6E0
D	-4	MET	-	expression tag	UNP Q9Y6E0
D	-3	HIS	-	expression tag	UNP Q9Y6E0
D	-2	HIS	-	expression tag	UNP Q9Y6E0
D	-1	HIS	-	expression tag	UNP Q9Y6E0
D	0	HIS	-	expression tag	UNP Q9Y6E0
D	1	HIS	-	expression tag	UNP Q9Y6E0
D	2	HIS	-	expression tag	UNP Q9Y6E0
D	3	SER	-	expression tag	UNP Q9Y6E0
D	4	SER	-	expression tag	UNP Q9Y6E0
D	5	GLY	-	expression tag	UNP Q9Y6E0
D	6	VAL	-	expression tag	UNP Q9Y6E0
D	7	ASP	-	expression tag	UNP Q9Y6E0
D	8	LEU	-	expression tag	UNP Q9Y6E0
D	9	GLY	-	expression tag	UNP Q9Y6E0
D	10	THR	-	expression tag	UNP Q9Y6E0
D	11	GLU	-	expression tag	UNP Q9Y6E0
D	12	ASN	-	expression tag	UNP Q9Y6E0
D	13	LEU	-	expression tag	UNP Q9Y6E0
D	14	TYR	-	expression tag	UNP Q9Y6E0
D	15	PHE	-	expression tag	UNP Q9Y6E0

Continued on next page...

Continued from previous page...

Chain	Residue	Modelled	Actual	Comment	Reference
D	16	GLN	-	expression tag	UNP Q9Y6E0
D	17	SER	-	expression tag	UNP Q9Y6E0
D	18	MET	-	expression tag	UNP Q9Y6E0

- Molecule 3 is SULFATE ION (three-letter code: SO4) (formula: O_4S).

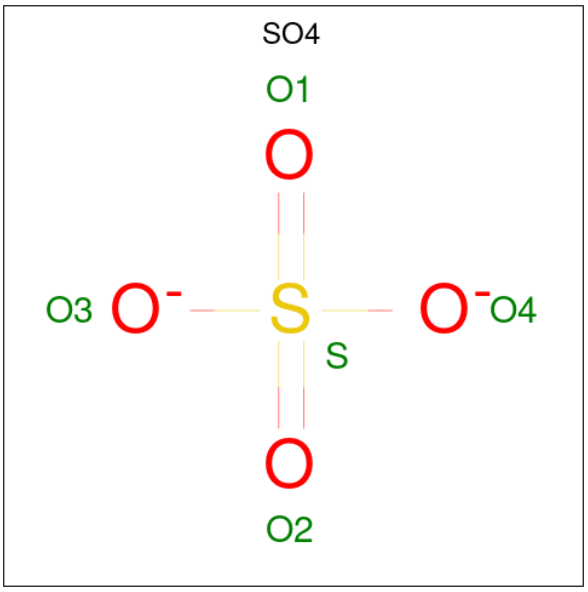

Mol	Chain	Residues	Atoms			ZeroOcc	AltConf
			Total	O	S		
3	A	1	5	4	1	0	0
			Total	O	S		
3	A	1	5	4	1	0	0
			Total	O	S		
3	B	1	5	4	1	0	0
			Total	O	S		
3	B	1	5	4	1	0	0

3 Residue-property plots (i)

These plots are drawn for all protein, RNA, DNA and oligosaccharide chains in the entry. The first graphic for a chain summarises the proportions of the various outlier classes displayed in the second graphic. The second graphic shows the sequence view annotated by issues in geometry and electron density. Residues are color-coded according to the number of geometric quality criteria for which they contain at least one outlier: green = 0, yellow = 1, orange = 2 and red = 3 or more. A red dot above a residue indicates a poor fit to the electron density (RSRZ > 2). Stretches of 2 or more consecutive residues without any outlier are shown as a green connector. Residues present in the sample, but not in the model, are shown in grey.

• Molecule 1: CALCIUM-BINDING PROTEIN 39-LIKE

Chain A:

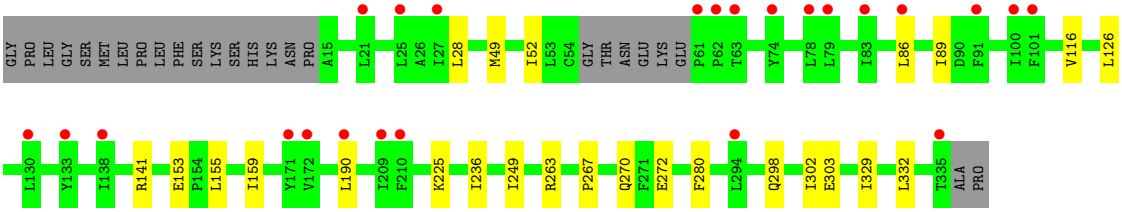

• Molecule 1: CALCIUM-BINDING PROTEIN 39-LIKE

Chain B:

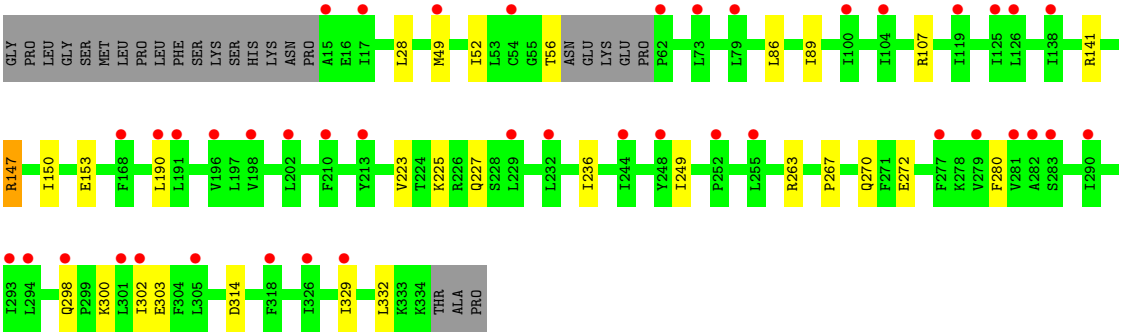

• Molecule 2: SERINE/THREONINE-PROTEIN KINASE 24

Chain C:

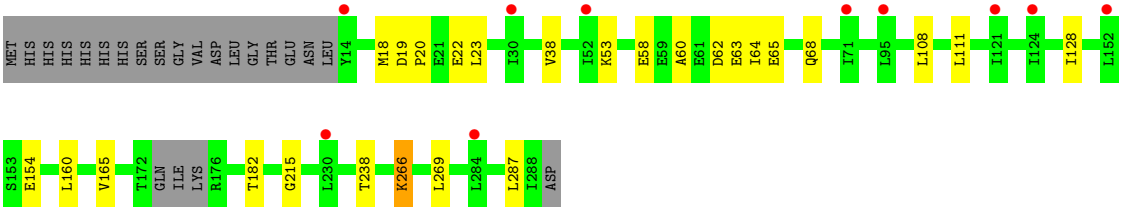

• Molecule 2: SERINE/THREONINE-PROTEIN KINASE 24

Chain D:

17%
82%
8%
10%

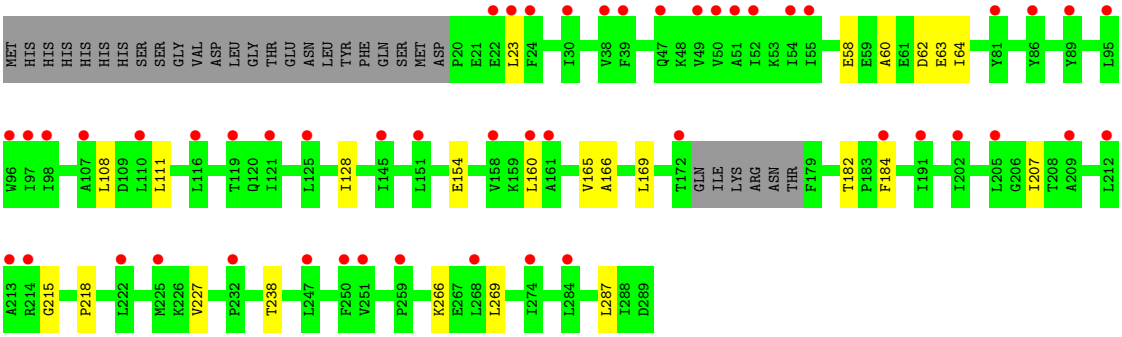
MET HIS HIS HIS HIS HIS HIS SER SER GLY VAL ASP LEU GLY THR GLU ASN LEU TYR PHE GLN SER MET ASP P20 E21 E22 L23 F24 I30 V38 F39 Q47 K48 V49 V50 A51 I52 K53 I54 I55 E58 E59 A60 E61 D62 E63 I64 Y81 Y86 Y89 L95
W96 I97 I98 A107 L108 D109 L110 L111 L116 T119 Q120 I121 L125 I128 I145 L151 E154 V158 K159 L160 A161 V165 A166 L169 T172 GLN ILE LYS ARG ASN THR F179 T182 P183 F184 I191 I202 L205 G206 I207 T208 A209 L212
A213 R214 G215 P218 L222 M225 K226 V227 P232 T238 L247 F250 V251 P259 K266 E267 L268 L269 I274 L284 L287 I288 D289

4 Data and refinement statistics (i)

Property	Value	Source
Space group	P 1 21 1	Depositor
Cell constants a, b, c, α, β, γ	64.80Å 120.34Å 98.91Å 90.00° 99.69° 90.00°	Depositor
Resolution (Å)	51.88 – 2.90 63.88 – 2.90	Depositor EDS
% Data completeness (in resolution range)	96.5 (51.88-2.90) 96.5 (63.88-2.90)	Depositor EDS
R_{merge}	0.07	Depositor
R_{sym}	(Not available)	Depositor
$< I/\sigma(I) >$ [1]	1.97 (at 2.91Å)	Xtriage
Refinement program	BUSTER 2.11.2	Depositor
R, R_{free}	0.227 , 0.261 0.239 , 0.277	Depositor DCC
R_{free} test set	1627 reflections (5.07%)	wwPDB-VP
Wilson B-factor (Å^2)	98.8	Xtriage
Anisotropy	0.208	Xtriage
Bulk solvent k_{sol}(e/Å^3), B_{sol}(Å^2)	0.30 , 82.0	EDS
L-test for twinning[2]	$< \|L\| > = 0.49$, $< L^2 > = 0.33$	Xtriage
Estimated twinning fraction	No twinning to report.	Xtriage
F_o,F_c correlation	0.94	EDS
Total number of atoms	8807	wwPDB-VP
Average B, all atoms (Å^2)	124.0	wwPDB-VP

Xtriage's analysis on translational NCS is as follows: *The largest off-origin peak in the Patterson function is 3.99% of the height of the origin peak. No significant pseudotranslation is detected.*

[1]Intensities estimated from amplitudes.

[2]Theoretical values of $< |L| >$, $< L^2 >$ for acentric reflections are 0.5, 0.333 respectively for untwinned datasets, and 0.375, 0.2 for perfectly twinned datasets.

5 Model quality (i)

5.1 Standard geometry (i)

Bond lengths and bond angles in the following residue types are not validated in this section: SO4

The Z score for a bond length (or angle) is the number of standard deviations the observed value is removed from the expected value. A bond length (or angle) with $|Z| > 5$ is considered an outlier worth inspection. RMSZ is the root-mean-square of all Z scores of the bond lengths (or angles).

Mol	Chain	Bond lengths		Bond angles	
		RMSZ	$\#\|Z\| >5$	RMSZ	$\#\|Z\| >5$
1	A	0.43	0/2455	0.55	0/3337
1	B	0.43	0/2465	0.56	0/3347
2	C	0.43	0/2083	0.61	0/2838
2	D	0.42	0/1952	0.59	0/2675
All	All	0.43	0/8955	0.58	0/12197

There are no bond length outliers.

There are no bond angle outliers.

There are no chirality outliers.

There are no planarity outliers.

5.2 Too-close contacts (i)

In the following table, the Non-H and H(model) columns list the number of non-hydrogen atoms and hydrogen atoms in the chain respectively. The H(added) column lists the number of hydrogen atoms added and optimized by MolProbity. The Clashes column lists the number of clashes within the asymmetric unit, whereas Symm-Clashes lists symmetry-related clashes.

Mol	Chain	Non-H	H(model)	H(added)	Clashes	Symm-Clashes
1	A	2410	0	2330	8	0
1	B	2422	0	2351	8	0
2	C	2042	0	1947	9	0
2	D	1913	0	1762	9	0
3	A	10	0	0	0	0
3	B	10	0	0	0	0
All	All	8807	0	8390	34	0

The all-atom clashscore is defined as the number of clashes found per 1000 atoms (including hydrogen atoms). The all-atom clashscore for this structure is 2.

All (34) close contacts within the same asymmetric unit are listed below, sorted by their clash magnitude.

Atom-1	Atom-2	Interatomic distance (Å)	Clash overlap (Å)
1:B:267:PRO:HA	1:B:270:GLN:HG2	1.89	0.54
1:A:267:PRO:HA	1:A:270:GLN:HG2	1.90	0.53
2:C:111:LEU:HD22	2:C:215:GLY:HA2	1.92	0.52
2:C:38:VAL:HG22	2:C:53:LYS:HG3	1.92	0.51
2:D:111:LEU:HD22	2:D:215:GLY:HA2	1.92	0.51
1:B:329:ILE:HA	1:B:332:LEU:HD12	1.94	0.49
2:D:207:ILE:HG23	2:D:218:PRO:HD2	1.96	0.48
1:B:223:VAL:O	1:B:227:GLN:HG2	2.14	0.47
1:A:329:ILE:HA	1:A:332:LEU:HD12	1.95	0.47
1:B:49:MET:HA	1:B:52:ILE:HD12	1.97	0.47
2:D:128:ILE:HG23	2:D:160:LEU:HD21	1.96	0.47
1:A:49:MET:HA	1:A:52:ILE:HD12	1.97	0.47
1:B:147:ARG:HA	1:B:150:ILE:HG12	1.97	0.47
2:D:266:LYS:HA	2:D:269:LEU:HD12	1.97	0.46
1:A:249:ILE:HA	1:A:280:PHE:CE2	2.50	0.46
2:C:266:LYS:HA	2:C:269:LEU:HD12	1.98	0.46
2:C:58:GLU:C	2:C:60:ALA:H	2.20	0.45
2:C:128:ILE:HG23	2:C:160:LEU:HD21	1.98	0.45
1:B:249:ILE:HA	1:B:280:PHE:CE2	2.52	0.44
2:D:58:GLU:C	2:D:60:ALA:H	2.20	0.44
2:C:62:ASP:O	2:C:64:ILE:N	2.48	0.44
1:A:86:LEU:HA	1:A:89:ILE:HD12	1.99	0.44
2:D:62:ASP:O	2:D:64:ILE:N	2.49	0.44
2:C:65:GLU:HA	2:C:68:GLN:HE21	1.82	0.43
1:B:86:LEU:HA	1:B:89:ILE:HD12	1.99	0.43
2:C:108:LEU:HA	2:C:111:LEU:HD12	2.01	0.43
2:D:108:LEU:HA	2:D:111:LEU:HD12	2.00	0.43
1:A:116:VAL:HG13	1:A:155:LEU:HG	2.01	0.42
2:D:62:ASP:C	2:D:64:ILE:H	2.24	0.41
1:A:126:LEU:HB3	1:A:159:ILE:HD11	2.03	0.41
1:A:298:GLN:O	1:A:302:ILE:HG12	2.21	0.41
1:B:298:GLN:O	1:B:302:ILE:HG12	2.21	0.41
2:C:62:ASP:C	2:C:64:ILE:H	2.23	0.40
2:D:184:PHE:CE1	2:D:227:VAL:HG21	2.57	0.40

There are no symmetry-related clashes.

5.3 Torsion angles (i)

5.3.1 Protein backbone (i)

In the following table, the Percentiles column shows the percent Ramachandran outliers of the chain as a percentile score with respect to all X-ray entries followed by that with respect to entries of similar resolution.

The Analysed column shows the number of residues for which the backbone conformation was analysed, and the total number of residues.

Mol	Chain	Analysed	Favoured	Allowed	Outliers	Percentiles	
1	A	311/340 (92%)	303 (97%)	8 (3%)	0	100	100
1	B	311/340 (92%)	304 (98%)	7 (2%)	0	100	100
2	C	268/294 (91%)	240 (90%)	21 (8%)	7 (3%)	5	20
2	D	260/294 (88%)	237 (91%)	19 (7%)	4 (2%)	10	34
All	All	1150/1268 (91%)	1084 (94%)	55 (5%)	11 (1%)	15	45

All (11) Ramachandran outliers are listed below:

Mol	Chain	Res	Type
2	C	20	PRO
2	C	63	GLU
2	C	154	GLU
2	D	63	GLU
2	D	154	GLU
2	C	18	MET
2	C	22	GLU
2	C	165	VAL
2	D	165	VAL
2	C	19	ASP
2	D	166	ALA

5.3.2 Protein sidechains (i)

In the following table, the Percentiles column shows the percent sidechain outliers of the chain as a percentile score with respect to all X-ray entries followed by that with respect to entries of similar resolution.

The Analysed column shows the number of residues for which the sidechain conformation was analysed, and the total number of residues.

Mol	Chain	Analysed	Rotameric	Outliers	Percentiles	
1	A	241/310 (78%)	232 (96%)	9 (4%)	34	68
1	B	246/310 (79%)	232 (94%)	14 (6%)	20	51
2	C	205/259 (79%)	200 (98%)	5 (2%)	49	79
2	D	185/259 (71%)	180 (97%)	5 (3%)	44	77
All	All	877/1138 (77%)	844 (96%)	33 (4%)	33	67

All (33) residues with a non-rotameric sidechain are listed below:

Mol	Chain	Res	Type
1	A	28	LEU
1	A	141	ARG
1	A	153	GLU
1	A	190	LEU
1	A	225	LYS
1	A	236	ILE
1	A	263	ARG
1	A	272	GLU
1	A	303	GLU
1	B	28	LEU
1	B	56	THR
1	B	107	ARG
1	B	141	ARG
1	B	147	ARG
1	B	153	GLU
1	B	190	LEU
1	B	225	LYS
1	B	236	ILE
1	B	263	ARG
1	B	272	GLU
1	B	300	LYS
1	B	303	GLU
1	B	314	ASP
2	C	23	LEU
2	C	182	THR
2	C	238	THR
2	C	266	LYS
2	C	287	LEU
2	D	23	LEU
2	D	169	LEU
2	D	182	THR
2	D	238	THR
2	D	287	LEU

Sometimes sidechains can be flipped to improve hydrogen bonding and reduce clashes. All (5) such sidechains are listed below:

Mol	Chain	Res	Type
1	A	270	GLN
1	A	288	GLN
1	B	270	GLN
2	C	68	GLN
2	D	68	GLN

5.3.3 RNA (i)

There are no RNA molecules in this entry.

5.4 Non-standard residues in protein, DNA, RNA chains (i)

There are no non-standard protein/DNA/RNA residues in this entry.

5.5 Carbohydrates (i)

There are no monosaccharides in this entry.

5.6 Ligand geometry (i)

4 ligands are modelled in this entry.

In the following table, the Counts columns list the number of bonds (or angles) for which Mogul statistics could be retrieved, the number of bonds (or angles) that are observed in the model and the number of bonds (or angles) that are defined in the Chemical Component Dictionary. The Link column lists molecule types, if any, to which the group is linked. The Z score for a bond length (or angle) is the number of standard deviations the observed value is removed from the expected value. A bond length (or angle) with $|Z| > 2$ is considered an outlier worth inspection. RMSZ is the root-mean-square of all Z scores of the bond lengths (or angles).

Mol	Type	Chain	Res	Link	Bond lengths			Bond angles		
					Counts	RMSZ	$\#\|Z\| > 2$	Counts	RMSZ	$\#\|Z\| > 2$
3	SO4	A	1333	-	4,4,4	0.12	0	6,6,6	0.07	0
3	SO4	B	1334	-	4,4,4	0.11	0	6,6,6	0.10	0
3	SO4	B	1333	-	4,4,4	0.13	0	6,6,6	0.07	0
3	SO4	A	1334	-	4,4,4	0.16	0	6,6,6	0.05	0

There are no bond length outliers.

There are no bond angle outliers.

There are no chirality outliers.

There are no torsion outliers.

There are no ring outliers.

No monomer is involved in short contacts.

5.7 Other polymers (i)

There are no such residues in this entry.

5.8 Polymer linkage issues (i)

There are no chain breaks in this entry.

6 Fit of model and data (i)

6.1 Protein, DNA and RNA chains (i)

In the following table, the column labelled '#RSRZ> 2' contains the number (and percentage) of RSRZ outliers, followed by percent RSRZ outliers for the chain as percentile scores relative to all X-ray entries and entries of similar resolution. The OWAB column contains the minimum, median, 95th percentile and maximum values of the occupancy-weighted average B-factor per residue. The column labelled 'Q< 0.9' lists the number of (and percentage) of residues with an average occupancy less than 0.9.

Mol	Chain	Analysed	<RSRZ>	#RSRZ>2	OWAB(Å^2)	Q<0.9
1	A	315/340 (92%)	0.43	24 (7%) 13 10	62, 111, 194, 222	0
1	B	315/340 (92%)	0.57	42 (13%) 3 2	68, 126, 186, 210	0
2	C	272/294 (92%)	0.14	10 (3%) 41 37	71, 103, 141, 163	0
2	D	264/294 (89%)	0.65	50 (18%) 1 0	97, 143, 189, 208	0
All	All	1166/1268 (91%)	0.45	126 (10%) 5 4	62, 121, 186, 222	0

All (126) RSRZ outliers are listed below:

Mol	Chain	Res	Type	RSRZ
1	B	294	LEU	6.6
1	B	79	LEU	5.8
1	A	79	LEU	5.6
2	D	52	ILE	5.2
2	D	121	ILE	5.0
2	D	212	LEU	4.7
2	D	23	LEU	4.4
2	D	54	ILE	4.3
1	B	248	TYR	4.3
2	D	250	PHE	4.3
2	D	50	VAL	4.2
2	D	51	ALA	4.1
1	B	283	SER	4.0
2	D	98	ILE	4.0
2	D	110	LEU	4.0
1	B	126	LEU	3.9
2	D	24	PHE	3.9
2	D	55	ILE	3.9
1	A	83	ILE	3.8
2	D	39	PHE	3.8
1	A	21	LEU	3.8

Continued on next page...

Continued from previous page...

Mol	Chain	Res	Type	RSRZ
1	B	277	PHE	3.7
1	A	86	LEU	3.7
2	D	247	LEU	3.6
1	A	63	THR	3.6
1	A	62	PRO	3.5
1	B	290	ILE	3.5
2	D	151	LEU	3.4
2	D	225	MET	3.4
1	A	130	LEU	3.4
1	A	78	LEU	3.4
1	B	54	CYS	3.4
2	D	119	THR	3.4
2	D	125	LEU	3.3
2	D	160	LEU	3.3
1	B	17	ILE	3.3
1	B	210	PHE	3.2
1	B	255	LEU	3.2
1	A	74	TYR	3.2
1	A	25	LEU	3.1
1	A	133	TYR	3.1
1	B	252	PRO	3.1
1	B	329	ILE	3.1
1	B	318	PHE	3.0
1	B	213	TYR	3.0
1	B	301	LEU	3.0
2	D	89	TYR	3.0
2	D	222	LEU	3.0
2	D	274	ILE	3.0
2	D	259	PRO	3.0
2	D	107	ALA	2.9
2	C	284	LEU	2.9
2	D	81	TYR	2.9
1	A	61	PRO	2.9
2	D	158	VAL	2.9
1	B	279	VAL	2.9
1	B	326	ILE	2.8
2	D	214	ARG	2.8
1	B	298	GLN	2.8
1	A	27	ILE	2.8
2	D	161	ALA	2.8
2	D	213	ALA	2.8
1	B	202	LEU	2.8

Continued on next page...

Continued from previous page...

Mol	Chain	Res	Type	RSRZ
2	D	191	ILE	2.8
1	B	49	MET	2.7
1	B	119	ILE	2.7
1	B	232	LEU	2.7
2	D	86	TYR	2.7
2	D	202	ILE	2.7
1	B	198	VAL	2.7
2	D	268	LEU	2.7
2	D	96	TRP	2.6
1	B	62	PRO	2.6
1	A	101	PHE	2.6
1	B	281	VAL	2.6
1	A	138	ILE	2.6
1	A	209	ILE	2.5
1	B	302	ILE	2.5
2	D	95	LEU	2.5
2	D	209	ALA	2.5
2	C	30	ILE	2.5
1	B	282	ALA	2.5
1	B	104	ILE	2.5
2	D	172	THR	2.5
2	D	38	VAL	2.5
2	D	232	PRO	2.4
1	A	172	VAL	2.4
2	C	124	ILE	2.4
2	D	145	ILE	2.4
1	B	305	LEU	2.4
2	C	121	ILE	2.3
1	A	190	LEU	2.3
2	D	30	ILE	2.3
1	B	190	LEU	2.3
1	A	100	ILE	2.3
1	B	125	ILE	2.3
1	B	15	ALA	2.2
1	B	244	ILE	2.2
1	B	191	LEU	2.2
1	B	229	LEU	2.2
2	C	230	LEU	2.2
2	D	205	LEU	2.2
2	D	22	GLU	2.2
1	A	171	TYR	2.2
2	C	14	TYR	2.2

Continued on next page...

Continued from previous page...

Mol	Chain	Res	Type	RSRZ
2	C	52	ILE	2.2
2	D	97	ILE	2.2
2	C	71	ILE	2.2
2	D	47	GLN	2.2
1	B	196	VAL	2.2
1	A	210	PHE	2.1
2	D	116	LEU	2.1
2	D	184	PHE	2.1
1	B	293	ILE	2.1
2	D	49	VAL	2.1
2	C	95	LEU	2.1
1	A	91	PHE	2.1
1	B	168	PHE	2.1
2	C	152	LEU	2.1
2	D	251	VAL	2.1
1	B	73	LEU	2.1
1	A	294	LEU	2.1
1	B	100	ILE	2.1
1	A	335	THR	2.1
2	D	284	LEU	2.0
1	B	138	ILE	2.0

6.2 Non-standard residues in protein, DNA, RNA chains (i)

There are no non-standard protein/DNA/RNA residues in this entry.

6.3 Carbohydrates (i)

There are no monosaccharides in this entry.

6.4 Ligands (i)

In the following table, the Atoms column lists the number of modelled atoms in the group and the number defined in the chemical component dictionary. The B-factors column lists the minimum, median, 95th percentile and maximum values of B factors of atoms in the group. The column labelled 'Q< 0.9' lists the number of atoms with occupancy less than 0.9.

Mol	Type	Chain	Res	Atoms	RSCC	RSR	B-factors(Å^2)	Q<0.9
3	SO4	B	1334	5/5	0.70	0.20	163,163,163,164	0
3	SO4	A	1333	5/5	0.84	0.32	159,159,159,159	0

Continued on next page...

Continued from previous page...

Mol	Type	Chain	Res	Atoms	RSCC	RSR	B-factors(Å^2)	Q<0.9
3	SO4	A	1334	5/5	0.86	0.14	172,172,172,172	0
3	SO4	B	1333	5/5	0.90	0.23	174,174,175,175	0

6.5 Other polymers (i)

There are no such residues in this entry.