Full wwPDB X-ray Structure Validation Report (i)

Jun 19, 2024 – 02:51 AM EDT

PDB ID	:	3ZHC
Title	:	Structure of the phytase from Citrobacter braakii at 2.3 angstrom resolution.
Authors	:	Wilson, K.S.; Ariza, A.; Sanchez-Romero, I.; Skjot, M.; Vind, J.; DeMaria, L.; Skov, L.K.; Sanchez-Ruiz, J.M.
Deposited on	:	2012-12-20
Resolution	:	2.30 Å(reported)

This is a Full wwPDB X-ray Structure Validation Report for a publicly released PDB entry.

We welcome your comments at *validation@mail.wwpdb.org*
A user guide is available at
https://www.wwpdb.org/validation/2017/XrayValidationReportHelp
with specific help available everywhere you see the (i) symbol.

The types of validation reports are described at
http://www.wwpdb.org/validation/2017/FAQs#types.

The following versions of software and data (see references (i)) were used in the production of this report:

MolProbity	:	4.02b-467
Mogul	:	2022.3.0, CSD as543be (2022)
Xtriage (Phenix)	:	1.20.1
EDS	:	2.37.1
Percentile statistics	:	20191225.v01 (using entries in the PDB archive December 25th 2019)
Refmac	:	5.8.0158
CCP4	:	7.0.044 (Gargrove)
Ideal geometry (proteins)	:	Engh & Huber (2001)
Ideal geometry (DNA, RNA)	:	Parkinson et al. (1996)
Validation Pipeline (wwPDB-VP)	:	2.37.1

1 Overall quality at a glance (i)

The following experimental techniques were used to determine the structure:
X-RAY DIFFRACTION

The reported resolution of this entry is 2.30 Å.

Percentile scores (ranging between 0-100) for global validation metrics of the entry are shown in the following graphic. The table shows the number of entries on which the scores are based.

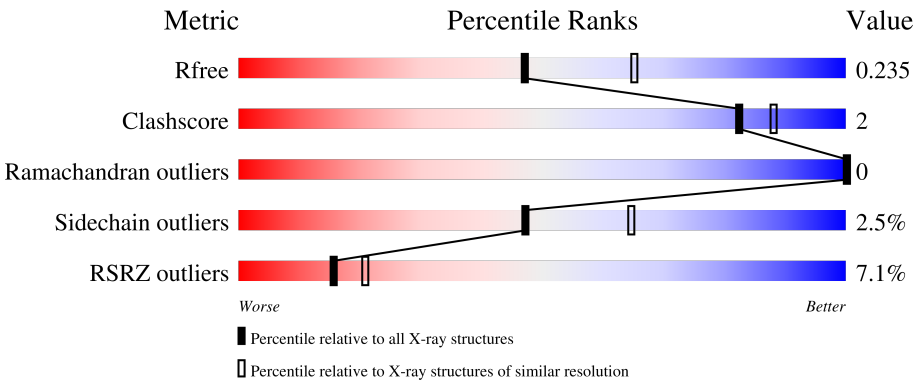

Metric	Whole archive (#Entries)	Similar resolution (#Entries, resolution range(Å))
R_{free}	130704	5042 (2.30-2.30)
Clashscore	141614	5643 (2.30-2.30)
Ramachandran outliers	138981	5575 (2.30-2.30)
Sidechain outliers	138945	5575 (2.30-2.30)
RSRZ outliers	127900	4938 (2.30-2.30)

The table below summarises the geometric issues observed across the polymeric chains and their fit to the electron density. The red, orange, yellow and green segments of the lower bar indicate the fraction of residues that contain outliers for >=3, 2, 1 and 0 types of geometric quality criteria respectively. A grey segment represents the fraction of residues that are not modelled. The numeric value for each fraction is indicated below the corresponding segment, with a dot representing fractions <=5% The upper red bar (where present) indicates the fraction of residues that have poor fit to the electron density. The numeric value is given above the bar.

Mol	Chain	Length	Quality of chain
1	A	433	8% 84% 7% 9%
1	B	433	5% 85% 8% • 6%

The following table lists non-polymeric compounds, carbohydrate monomers and non-standard residues in protein, DNA, RNA chains that are outliers for geometric or electron-density-fit criteria:

Mol	Type	Chain	Res	Chirality	Geometry	Clashes	Electron density
2	FMT	A	1415	-	-	-	X

2 Entry composition (i)

There are 4 unique types of molecules in this entry. The entry contains 7068 atoms, of which 0 are hydrogens and 0 are deuteriums.

In the tables below, the ZeroOcc column contains the number of atoms modelled with zero occupancy, the AltConf column contains the number of residues with at least one atom in alternate conformation and the Trace column contains the number of residues modelled with at most 2 atoms.

- Molecule 1 is a protein called PHYTASE.

Mol	Chain	Residues	Atoms					ZeroOcc	AltConf	Trace
			Total	C	N	O	S			
1	A	396	3148	1991	548	591	18	0	7	0
1	B	407	3278	2072	566	622	18	0	16	0

There are 12 discrepancies between the modelled and reference sequences:

Chain	Residue	Modelled	Actual	Comment	Reference
A	31	ASN	ASP	SEE REMARK 999	UNP Q2VY22
A	139	GLN	LYS	SEE REMARK 999	UNP Q2VY22
A	141	CYS	LYS	engineered mutation	UNP Q2VY22
A	197	LEU	PHE	SEE REMARK 999	UNP Q2VY22
A	199	CYS	VAL	engineered mutation	UNP Q2VY22
A	316	ASN	LYS	SEE REMARK 999	UNP Q2VY22
B	31	ASN	ASP	SEE REMARK 999	UNP Q2VY22
B	139	GLN	LYS	SEE REMARK 999	UNP Q2VY22
B	141	CYS	LYS	engineered mutation	UNP Q2VY22
B	197	LEU	PHE	SEE REMARK 999	UNP Q2VY22
B	199	CYS	VAL	engineered mutation	UNP Q2VY22
B	316	ASN	LYS	SEE REMARK 999	UNP Q2VY22

- Molecule 2 is FORMIC ACID (three-letter code: FMT) (formula: CH_2O_2).

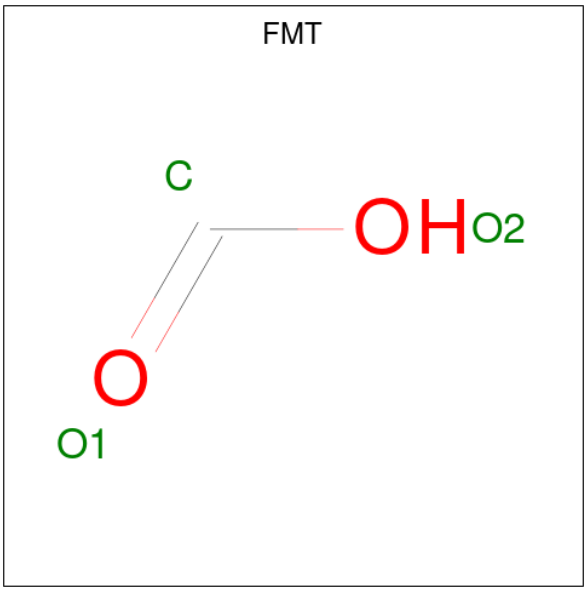

Mol	Chain	Residues	Atoms				ZeroOcc	AltConf
2	A	1	Total	C	O		0	0
			3	1	2			
2	A	1	Total	C	O		0	0
			3	1	2			
2	A	1	Total	C	O		0	0
			3	1	2			
2	A	1	Total	C	O		0	0
			3	1	2			
2	A	1	Total	C	O		0	0
			3	1	2			
2	A	1	Total	C	O		0	0
			3	1	2			
2	A	1	Total	C	O		0	0
			3	1	2			
2	B	1	Total	C	O		0	0
			3	1	2			
2	B	1	Total	C	O		0	0
			3	1	2			
2	B	1	Total	C	O		0	0
			3	1	2			
2	B	1	Total	C	O		0	0
			3	1	2			
2	B	1	Total	C	O		0	0
			3	1	2			
2	B	1	Total	C	O		0	0
			3	1	2			
2	B	1	Total	C	O		0	0
			3	1	2			

Continued on next page...

Continued from previous page...

Mol	Chain	Residues	Atoms			ZeroOcc	AltConf
			Total	C	O		
2	B	1	6	2	4	0	1
			Total	C	O		
2	B	1	6	2	4	0	1

- Molecule 3 is CHLORIDE ION (three-letter code: CL) (formula: Cl).

Mol	Chain	Residues	Atoms		ZeroOcc	AltConf
			Total	Cl		
3	A	4	4	4	0	0
			Total	Cl		
3	B	6	6	6	0	0

- Molecule 4 is water.

Mol	Chain	Residues	Atoms		ZeroOcc	AltConf
			Total	O		
4	A	294	294	294	0	0
			Total	O		
4	B	284	284	284	0	0

3 Residue-property plots (i)

These plots are drawn for all protein, RNA, DNA and oligosaccharide chains in the entry. The first graphic for a chain summarises the proportions of the various outlier classes displayed in the second graphic. The second graphic shows the sequence view annotated by issues in geometry and electron density. Residues are color-coded according to the number of geometric quality criteria for which they contain at least one outlier: green = 0, yellow = 1, orange = 2 and red = 3 or more. A red dot above a residue indicates a poor fit to the electron density (RSRZ > 2). Stretches of 2 or more consecutive residues without any outlier are shown as a green connector. Residues present in the sample, but not in the model, are shown in grey.

• Molecule 1: PHYTASE

Chain A:

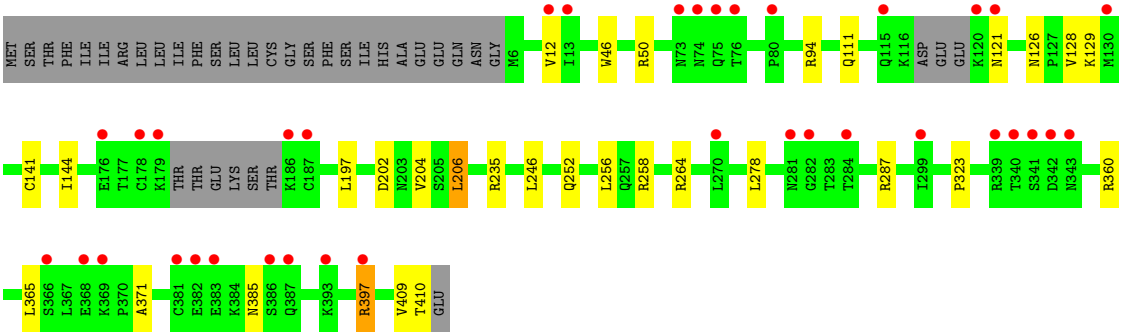

• Molecule 1: PHYTASE

Chain B:

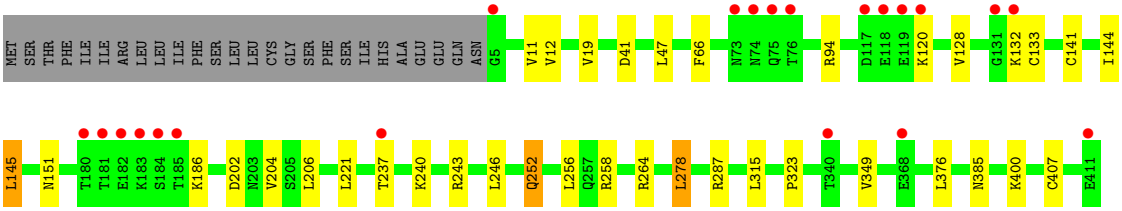

4 Data and refinement statistics (i)

Property	Value	Source
Space group	P 31 2 1	Depositor
Cell constants a, b, c, α, β, γ	121.51Å 121.51Å 129.11Å 90.00° 90.00° 120.00°	Depositor
Resolution (Å)	35.08 – 2.30 35.08 – 2.30	Depositor EDS
% Data completeness (in resolution range)	100.0 (35.08-2.30) 100.0 (35.08-2.30)	Depositor EDS
R_{merge}	0.01	Depositor
R_{sym}	(Not available)	Depositor
$< I/\sigma(I) >$ [1]	3.88 (at 2.29Å)	Xtriage
Refinement program	REFMAC 5.5.0109	Depositor
R, R_{free}	0.195 , 0.237 0.193 , 0.235	Depositor DCC
R_{free} test set	2466 reflections (5.00%)	wwPDB-VP
Wilson B-factor (Å^2)	23.8	Xtriage
Anisotropy	0.566	Xtriage
Bulk solvent k_{sol}(e/Å^3), B_{sol}(Å^2)	0.41 , 47.4	EDS
L-test for twinning[2]	$< \|L\| > = 0.47$, $< L^2 > = 0.30$	Xtriage
Estimated twinning fraction	0.033 for -h,-k,l	Xtriage
F_o,F_c correlation	0.94	EDS
Total number of atoms	7068	wwPDB-VP
Average B, all atoms (Å^2)	24.0	wwPDB-VP

Xtriage's analysis on translational NCS is as follows: *The largest off-origin peak in the Patterson function is 2.76% of the height of the origin peak. No significant pseudotranslation is detected.*

[1]Intensities estimated from amplitudes.

[2]Theoretical values of $< |L| >$, $< L^2 >$ for acentric reflections are 0.5, 0.333 respectively for untwinned datasets, and 0.375, 0.2 for perfectly twinned datasets.

5 Model quality (i)

5.1 Standard geometry (i)

Bond lengths and bond angles in the following residue types are not validated in this section: CL, FMT

The Z score for a bond length (or angle) is the number of standard deviations the observed value is removed from the expected value. A bond length (or angle) with $|Z| > 5$ is considered an outlier worth inspection. RMSZ is the root-mean-square of all Z scores of the bond lengths (or angles).

Mol	Chain	Bond lengths		Bond angles	
		RMSZ	$\#\|Z\|>5$	RMSZ	$\#\|Z\|>5$
1	A	0.86	1/3235 (0.0%)	0.71	6/4392 (0.1%)
1	B	0.87	0/3390	0.73	5/4601 (0.1%)
All	All	0.87	1/6625 (0.0%)	0.72	11/8993 (0.1%)

All (1) bond length outliers are listed below:

Mol	Chain	Res	Type	Atoms	Z	Observed(Å)	Ideal(Å)
1	A	397	ARG	CG-CD	5.37	1.65	1.51

All (11) bond angle outliers are listed below:

Mol	Chain	Res	Type	Atoms	Z	Observed(^{o})	Ideal(^{o})
1	B	94	ARG	NE-CZ-NH1	8.31	124.46	120.30
1	B	94	ARG	NE-CZ-NH2	-7.72	116.44	120.30
1	A	397	ARG	NE-CZ-NH1	6.97	123.78	120.30
1	B	287	ARG	NE-CZ-NH1	5.91	123.26	120.30
1	A	258	ARG	NE-CZ-NH1	5.70	123.15	120.30
1	B	258	ARG	NE-CZ-NH1	5.55	123.08	120.30
1	A	287	ARG	NE-CZ-NH1	5.45	123.03	120.30
1	A	235	ARG	NE-CZ-NH1	5.30	122.95	120.30
1	B	264	ARG	NE-CZ-NH1	5.23	122.92	120.30
1	A	264	ARG	NE-CZ-NH1	5.17	122.88	120.30
1	A	397	ARG	CG-CD-NE	5.10	122.51	111.80

There are no chirality outliers.

There are no planarity outliers.

5.2 Too-close contacts (i)

In the following table, the Non-H and H(model) columns list the number of non-hydrogen atoms and hydrogen atoms in the chain respectively. The H(added) column lists the number of hydrogen atoms added and optimized by MolProbity. The Clashes column lists the number of clashes within the asymmetric unit, whereas Symm-Clashes lists symmetry-related clashes.

Mol	Chain	Non-H	H(model)	H(added)	Clashes	Symm-Clashes
1	A	3148	0	3165	13	0
1	B	3278	0	3313	21	0
2	A	21	0	7	0	0
2	B	33	0	11	0	0
3	A	4	0	0	0	0
3	B	6	0	0	0	0
4	A	294	0	0	1	0
4	B	284	0	0	2	0
All	All	7068	0	6496	32	0

The all-atom clashscore is defined as the number of clashes found per 1000 atoms (including hydrogen atoms). The all-atom clashscore for this structure is 2.

All (32) close contacts within the same asymmetric unit are listed below, sorted by their clash magnitude.

Atom-1	Atom-2	Interatomic distance (Å)	Clash overlap (Å)
1:B:237[A]:THR:O	4:B:2202:HOH:O	1.79	0.98
1:B:237[B]:THR:O	4:B:2202:HOH:O	1.87	0.92
1:B:204[A]:VAL:HG12	1:B:256:LEU:HD22	1.65	0.76
1:B:252[B]:GLN:HE21	1:B:252[B]:GLN:HA	1.53	0.73
1:A:246:LEU:HD13	1:A:323:PRO:HB2	1.73	0.68
1:B:206:LEU:HD23	1:B:252[B]:GLN:HE22	1.62	0.64
1:A:365:LEU:HD13	1:A:371:ALA:HB2	1.81	0.61
1:B:246:LEU:HD13	1:B:323:PRO:HB2	1.83	0.61
1:B:128:VAL:HG12	1:B:202:ASP:HA	1.86	0.58
1:A:50[A]:ARG:NH2	1:A:360:ARG:O	2.38	0.57
1:B:144:ILE:CD1	1:B:204[B]:VAL:HG21	2.35	0.57
1:A:128:VAL:HG12	1:A:202:ASP:HA	1.88	0.55
1:B:221:LEU:HD13	1:B:246:LEU:HD13	1.93	0.50
1:A:144:ILE:CD1	1:A:204:VAL:HG11	2.41	0.49
1:A:204:VAL:HG12	1:A:256:LEU:HD22	1.93	0.49
1:A:409:VAL:N	1:A:410:THR:HA	2.27	0.49
1:B:252[A]:GLN:HE21	1:B:252[A]:GLN:HB3	1.49	0.47
1:B:144:ILE:CD1	1:B:204[A]:VAL:HG11	2.46	0.46
1:B:19:VAL:O	1:B:47:LEU:HD12	2.19	0.43

Continued on next page...

Continued from previous page...

Atom-1	Atom-2	Interatomic distance (Å)	Clash overlap (Å)
1:A:129:LYS:HA	1:A:202:ASP:HB2	2.00	0.43
1:B:132[A]:LYS:HB2	1:B:132[A]:LYS:HE3	1.72	0.42
1:B:145:LEU:HD21	1:B:151[A]:ASN:HA	2.01	0.42
1:B:349:VAL:HG12	1:B:376:LEU:HD12	2.01	0.42
1:A:410:THR:HG21	4:A:2292:HOH:O	2.20	0.42
1:B:133:CYS:HB2	1:B:407:CYS:HA	2.02	0.42
1:B:221:LEU:HD13	1:B:246:LEU:CD1	2.50	0.42
1:A:46:TRP:CZ3	1:B:243:ARG:HD2	2.56	0.41
1:A:94:ARG:CZ	1:B:240:LYS:HD3	2.50	0.41
1:B:12:VAL:HG23	1:B:278:LEU:CD1	2.51	0.41
1:B:11:VAL:HG21	1:B:66:PHE:CE1	2.55	0.41
1:A:12:VAL:HG23	1:A:278:LEU:CD1	2.51	0.40
1:A:197:LEU:HA	1:A:206:LEU:HD12	2.03	0.40

There are no symmetry-related clashes.

5.3 Torsion angles (i)

5.3.1 Protein backbone (i)

In the following table, the Percentiles column shows the percent Ramachandran outliers of the chain as a percentile score with respect to all X-ray entries followed by that with respect to entries of similar resolution.

The Analysed column shows the number of residues for which the backbone conformation was analysed, and the total number of residues.

Mol	Chain	Analysed	Favoured	Allowed	Outliers	Percentiles	
1	A	397/433 (92%)	390 (98%)	7 (2%)	0	100	100
1	B	420/433 (97%)	417 (99%)	3 (1%)	0	100	100
All	All	817/866 (94%)	807 (99%)	10 (1%)	0	100	100

There are no Ramachandran outliers to report.

5.3.2 Protein sidechains (i)

In the following table, the Percentiles column shows the percent sidechain outliers of the chain as a percentile score with respect to all X-ray entries followed by that with respect to entries of similar resolution.

The Analysed column shows the number of residues for which the sidechain conformation was analysed, and the total number of residues.

Mol	Chain	Analysed	Rotameric	Outliers	Percentiles	
1	A	356/383 (93%)	348 (98%)	8 (2%)	52	69
1	B	375/383 (98%)	364 (97%)	11 (3%)	42	58
All	All	731/766 (95%)	712 (97%)	19 (3%)	47	63

All (19) residues with a non-rotameric sidechain are listed below:

Mol	Chain	Res	Type
1	A	111	GLN
1	A	121	ASN
1	A	126	ASN
1	A	141	CYS
1	A	206	LEU
1	A	252	GLN
1	A	385	ASN
1	A	397	ARG
1	B	41	ASP
1	B	120	LYS
1	B	141	CYS
1	B	145	LEU
1	B	186	LYS
1	B	252[A]	GLN
1	B	252[B]	GLN
1	B	278	LEU
1	B	315	LEU
1	B	385	ASN
1	B	400	LYS

Sometimes sidechains can be flipped to improve hydrogen bonding and reduce clashes. All (6) such sidechains are listed below:

Mol	Chain	Res	Type
1	A	111	GLN
1	A	385	ASN
1	B	82	GLN
1	B	111	GLN
1	B	316	ASN
1	B	385	ASN

5.3.3 RNA (i)

There are no RNA molecules in this entry.

5.4 Non-standard residues in protein, DNA, RNA chains (i)

There are no non-standard protein/DNA/RNA residues in this entry.

5.5 Carbohydrates (i)

There are no monosaccharides in this entry.

5.6 Ligand geometry (i)

Of 28 ligands modelled in this entry, 10 are monoatomic - leaving 18 for Mogul analysis.

In the following table, the Counts columns list the number of bonds (or angles) for which Mogul statistics could be retrieved, the number of bonds (or angles) that are observed in the model and the number of bonds (or angles) that are defined in the Chemical Component Dictionary. The Link column lists molecule types, if any, to which the group is linked. The Z score for a bond length (or angle) is the number of standard deviations the observed value is removed from the expected value. A bond length (or angle) with $|Z| > 2$ is considered an outlier worth inspection. RMSZ is the root-mean-square of all Z scores of the bond lengths (or angles).

Mol	Type	Chain	Res	Link	Bond lengths			Bond angles		
					Counts	RMSZ	$\#\|Z\| > 2$	Counts	RMSZ	$\#\|Z\| > 2$
2	FMT	B	1420[A]	-	2,2,2	0.67	0	1,1,1	0.36	0
2	FMT	A	1414	-	2,2,2	0.59	0	1,1,1	0.35	0
2	FMT	B	1420[B]	-	2,2,2	0.75	0	1,1,1	0.31	0
2	FMT	B	1417	-	2,2,2	0.72	0	1,1,1	0.32	0
2	FMT	B	1415	-	2,2,2	0.61	0	1,1,1	0.25	0
2	FMT	B	1414	-	2,2,2	0.83	0	1,1,1	0.57	0
2	FMT	A	1417	-	2,2,2	0.72	0	1,1,1	0.37	0
2	FMT	B	1419[A]	-	2,2,2	0.74	0	1,1,1	0.40	0
2	FMT	A	1415	-	2,2,2	0.67	0	1,1,1	0.32	0
2	FMT	B	1413	-	2,2,2	0.82	0	1,1,1	0.40	0
2	FMT	B	1412	-	2,2,2	0.82	0	1,1,1	0.48	0
2	FMT	B	1419[B]	-	2,2,2	0.64	0	1,1,1	0.36	0
2	FMT	A	1416	-	2,2,2	0.69	0	1,1,1	0.38	0
2	FMT	A	1413	-	2,2,2	0.79	0	1,1,1	0.33	0
2	FMT	A	1411	-	2,2,2	0.86	0	1,1,1	0.53	0
2	FMT	B	1418	-	2,2,2	0.74	0	1,1,1	0.27	0
2	FMT	B	1416	-	2,2,2	0.65	0	1,1,1	0.18	0
2	FMT	A	1412	-	2,2,2	0.62	0	1,1,1	0.37	0

There are no bond length outliers.

There are no bond angle outliers.

There are no chirality outliers.

There are no torsion outliers.

There are no ring outliers.

No monomer is involved in short contacts.

5.7 Other polymers (i)

There are no such residues in this entry.

5.8 Polymer linkage issues (i)

There are no chain breaks in this entry.

6 Fit of model and data (i)

6.1 Protein, DNA and RNA chains (i)

In the following table, the column labelled '#RSRZ> 2' contains the number (and percentage) of RSRZ outliers, followed by percent RSRZ outliers for the chain as percentile scores relative to all X-ray entries and entries of similar resolution. The OWAB column contains the minimum, median, 95th percentile and maximum values of the occupancy-weighted average B-factor per residue. The column labelled 'Q< 0.9' lists the number of (and percentage) of residues with an average occupancy less than 0.9.

Mol	Chain	Analysed	<RSRZ>	#RSRZ>2			OWAB(Å^2)	Q<0.9
1	A	396/433 (91%)	0.18	36 (9%)	9	12	12, 25, 42, 47	0
1	B	407/433 (93%)	-0.08	21 (5%)	27	34	9, 20, 35, 40	0
All	All	803/866 (92%)	0.05	57 (7%)	16	21	9, 22, 39, 47	0

All (57) RSRZ outliers are listed below:

Mol	Chain	Res	Type	RSRZ
1	B	184	SER	4.9
1	A	186	LYS	4.5
1	B	180	THR	4.4
1	B	182	GLU	4.3
1	A	80	PRO	4.0
1	A	76	THR	4.0
1	A	187	CYS	3.5
1	B	119	GLU	3.4
1	A	368	GLU	3.3
1	B	368	GLU	3.3
1	B	117	ASP	3.3
1	B	120	LYS	3.3
1	A	178[A]	CYS	3.3
1	B	118	GLU	3.3
1	A	340	THR	3.2
1	A	284	THR	3.2
1	B	340	THR	3.2
1	A	341	SER	3.2
1	B	131	GLY	3.1
1	A	386	SER	3.0
1	B	73	ASN	3.0
1	A	130	MET	2.9
1	A	282	GLY	2.9
1	A	74	ASN	2.9

Continued on next page...

Continued from previous page...

Mol	Chain	Res	Type	RSRZ
1	A	343	ASN	2.8
1	B	75	GLN	2.8
1	A	387	GLN	2.7
1	B	183	LYS	2.7
1	A	12	VAL	2.7
1	A	369	LYS	2.7
1	A	382	GLU	2.7
1	A	342	ASP	2.6
1	A	179	LYS	2.6
1	B	132[A]	LYS	2.6
1	A	281	ASN	2.6
1	B	76	THR	2.6
1	A	366	SER	2.5
1	A	397	ARG	2.5
1	A	13	ILE	2.5
1	B	181	THR	2.4
1	B	237[A]	THR	2.4
1	A	383	GLU	2.4
1	B	185	THR	2.4
1	A	381	CYS	2.4
1	B	74	ASN	2.3
1	B	411[A]	GLU	2.3
1	B	5	GLY	2.3
1	A	115	GLN	2.3
1	A	120	LYS	2.2
1	A	176	GLU	2.2
1	A	270	LEU	2.2
1	A	121	ASN	2.1
1	A	75	GLN	2.1
1	A	393	LYS	2.1
1	A	73	ASN	2.0
1	A	339	ARG	2.0
1	A	299	ILE	2.0

6.2 Non-standard residues in protein, DNA, RNA chains (i)

There are no non-standard protein/DNA/RNA residues in this entry.

6.3 Carbohydrates (i)

There are no monosaccharides in this entry.

6.4 Ligands (i)

In the following table, the Atoms column lists the number of modelled atoms in the group and the number defined in the chemical component dictionary. The B-factors column lists the minimum, median, 95th percentile and maximum values of B factors of atoms in the group. The column labelled 'Q< 0.9' lists the number of atoms with occupancy less than 0.9.

Mol	Type	Chain	Res	Atoms	RSCC	RSR	B-factors(Å^2)	Q<0.9
2	FMT	B	1415	3/3	0.61	0.23	54,54,54,54	0
2	FMT	A	1417	3/3	0.77	0.37	65,65,65,65	0
2	FMT	A	1415	3/3	0.80	0.41	63,63,63,63	0
2	FMT	A	1416	3/3	0.82	0.21	67,67,67,67	0
2	FMT	B	1420[A]	3/3	0.82	0.28	28,28,28,28	3
2	FMT	B	1420[B]	3/3	0.82	0.28	16,16,16,16	3
2	FMT	A	1414	3/3	0.83	0.26	34,34,35,35	0
2	FMT	B	1419[B]	3/3	0.86	0.38	20,20,20,20	3
2	FMT	B	1418	3/3	0.86	0.24	47,47,47,47	0
2	FMT	B	1419[A]	3/3	0.86	0.38	45,45,45,45	3
2	FMT	A	1413	3/3	0.93	0.13	46,46,46,46	0
2	FMT	B	1416	3/3	0.93	0.12	38,38,38,38	0
2	FMT	B	1417	3/3	0.93	0.22	60,60,60,60	0
2	FMT	B	1414	3/3	0.93	0.18	24,24,24,24	0
3	CL	A	1419	1/1	0.93	0.15	55,55,55,55	0
3	CL	B	1422	1/1	0.94	0.22	56,56,56,56	0
3	CL	B	1423	1/1	0.95	0.07	51,51,51,51	0
3	CL	A	1421	1/1	0.97	0.09	31,31,31,31	0
3	CL	A	1418	1/1	0.97	0.05	27,27,27,27	0
2	FMT	A	1412	3/3	0.97	0.14	30,30,30,30	0
2	FMT	A	1411	3/3	0.98	0.08	20,20,20,20	0
2	FMT	B	1412	3/3	0.98	0.09	24,24,24,24	0
3	CL	B	1421	1/1	0.99	0.07	22,22,22,22	0
3	CL	A	1420	1/1	0.99	0.06	27,27,27,27	0
2	FMT	B	1413	3/3	0.99	0.09	20,20,21,21	0
3	CL	B	1424	1/1	0.99	0.05	25,25,25,25	0
3	CL	B	1425	1/1	0.99	0.11	31,31,31,31	0
3	CL	B	1426	1/1	1.00	0.02	20,20,20,20	0

6.5 Other polymers (i)

There are no such residues in this entry.