Full wwPDB X-ray Structure Validation Report (i)

Sep 17, 2023 – 06:12 PM EDT

PDB ID	:	4XTK
Title	:	Structure of TM1797, a CAS1 protein from Thermotoga maritima
Authors	:	Petit, P.; Beloglazova, N.; Skarina, T.; Chang, C.; Edwards, A.; Joachimiak, A.; Savchenko, A.; Midwest Center for Structural Genomics (MCSG)
Deposited on	:	2015-01-23
Resolution	:	2.70 Å(reported)

This is a Full wwPDB X-ray Structure Validation Report for a publicly released PDB entry.

We welcome your comments at *validation@mail.wwpdb.org*
A user guide is available at
https://www.wwpdb.org/validation/2017/XrayValidationReportHelp
with specific help available everywhere you see the (i) symbol.

The types of validation reports are described at
http://www.wwpdb.org/validation/2017/FAQs#types.

The following versions of software and data (see references (1)) were used in the production of this report:

MolProbity	:	4.02b-467
Xtriage (Phenix)	:	1.13
EDS	:	2.35.1
Percentile statistics	:	20191225.v01 (using entries in the PDB archive December 25th 2019)
Refmac	:	5.8.0158
CCP4	:	7.0.044 (Gargrove)
Ideal geometry (proteins)	:	Engh & Huber (2001)
Ideal geometry (DNA, RNA)	:	Parkinson et al. (1996)
Validation Pipeline (wwPDB-VP)	:	2.35.1

1 Overall quality at a glance (i)

The following experimental techniques were used to determine the structure:
X-RAY DIFFRACTION

The reported resolution of this entry is 2.70 Å.

Percentile scores (ranging between 0-100) for global validation metrics of the entry are shown in the following graphic. The table shows the number of entries on which the scores are based.

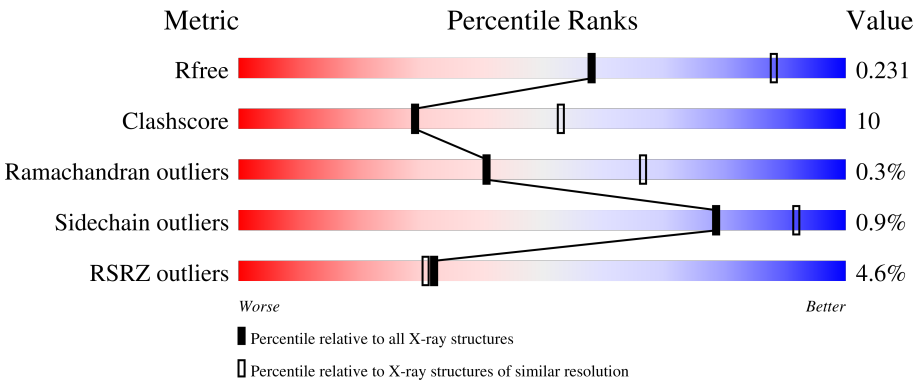

Metric	Whole archive (#Entries)	Similar resolution (#Entries, resolution range(Å))
R_{free}	130704	2808 (2.70-2.70)
Clashscore	141614	3122 (2.70-2.70)
Ramachandran outliers	138981	3069 (2.70-2.70)
Sidechain outliers	138945	3069 (2.70-2.70)
RSRZ outliers	127900	2737 (2.70-2.70)

The table below summarises the geometric issues observed across the polymeric chains and their fit to the electron density. The red, orange, yellow and green segments of the lower bar indicate the fraction of residues that contain outliers for >=3, 2, 1 and 0 types of geometric quality criteria respectively. A grey segment represents the fraction of residues that are not modelled. The numeric value for each fraction is indicated below the corresponding segment, with a dot representing fractions <=5% The upper red bar (where present) indicates the fraction of residues that have poor fit to the electron density. The numeric value is given above the bar.

Mol	Chain	Length	Quality of chain
1	A	326	5% 70% 23% • 5%
1	B	326	4% 76% 19% 5%
1	C	326	6% 68% 23% 9%
1	D	326	4% 79% 16% 5%
1	E	326	2% 81% 16% •

Continued on next page...

Continued from previous page...

Mol	Chain	Length	Quality of chain
1	F	326	5% 76% 19%
1	G	326	5% 74% 19% 7%
1	H	326	6% 70% 21% 8%

2 Entry composition (i)

There are 2 unique types of molecules in this entry. The entry contains 20014 atoms, of which 0 are hydrogens and 0 are deuteriums.

In the tables below, the ZeroOcc column contains the number of atoms modelled with zero occupancy, the AltConf column contains the number of residues with at least one atom in alternate conformation and the Trace column contains the number of residues modelled with at most 2 atoms.

- Molecule 1 is a protein called CRISPR-associated endonuclease Cas1.

Mol	Chain	Residues	Atoms					ZeroOcc	AltConf	Trace
			Total	C	N	O	S			
1	A	311	2476	1583	426	457	10	0	0	0
1	B	309	2459	1575	415	459	10	0	0	0
1	C	298	2382	1532	398	443	9	0	0	0
1	D	311	2487	1595	423	460	9	0	0	0
1	E	319	2609	1675	452	472	10	0	0	0
1	F	314	2562	1651	443	458	10	0	1	0
1	G	304	2465	1581	428	447	9	0	1	0
1	H	300	2441	1569	421	442	9	0	1	0

There are 56 discrepancies between the modelled and reference sequences:

Chain	Residue	Modelled	Actual	Comment	Reference
A	-6	ARG	-	expression tag	UNP Q9X2B7
A	-5	GLU	-	expression tag	UNP Q9X2B7
A	-4	LEU	-	expression tag	UNP Q9X2B7
A	-3	TYR	-	expression tag	UNP Q9X2B7
A	-2	PHE	-	expression tag	UNP Q9X2B7
A	-1	GLN	-	expression tag	UNP Q9X2B7
A	0	GLY	-	expression tag	UNP Q9X2B7
B	-6	ARG	-	expression tag	UNP Q9X2B7
B	-5	GLU	-	expression tag	UNP Q9X2B7
B	-4	LEU	-	expression tag	UNP Q9X2B7
B	-3	TYR	-	expression tag	UNP Q9X2B7
B	-2	PHE	-	expression tag	UNP Q9X2B7
B	-1	GLN	-	expression tag	UNP Q9X2B7

Continued on next page...

Continued from previous page...

Chain	Residue	Modelled	Actual	Comment	Reference
B	0	GLY	-	expression tag	UNP Q9X2B7
C	-6	ARG	-	expression tag	UNP Q9X2B7
C	-5	GLU	-	expression tag	UNP Q9X2B7
C	-4	LEU	-	expression tag	UNP Q9X2B7
C	-3	TYR	-	expression tag	UNP Q9X2B7
C	-2	PHE	-	expression tag	UNP Q9X2B7
C	-1	GLN	-	expression tag	UNP Q9X2B7
C	0	GLY	-	expression tag	UNP Q9X2B7
D	-6	ARG	-	expression tag	UNP Q9X2B7
D	-5	GLU	-	expression tag	UNP Q9X2B7
D	-4	LEU	-	expression tag	UNP Q9X2B7
D	-3	TYR	-	expression tag	UNP Q9X2B7
D	-2	PHE	-	expression tag	UNP Q9X2B7
D	-1	GLN	-	expression tag	UNP Q9X2B7
D	0	GLY	-	expression tag	UNP Q9X2B7
E	-6	ARG	-	expression tag	UNP Q9X2B7
E	-5	GLU	-	expression tag	UNP Q9X2B7
E	-4	LEU	-	expression tag	UNP Q9X2B7
E	-3	TYR	-	expression tag	UNP Q9X2B7
E	-2	PHE	-	expression tag	UNP Q9X2B7
E	-1	GLN	-	expression tag	UNP Q9X2B7
E	0	GLY	-	expression tag	UNP Q9X2B7
F	-6	ARG	-	expression tag	UNP Q9X2B7
F	-5	GLU	-	expression tag	UNP Q9X2B7
F	-4	LEU	-	expression tag	UNP Q9X2B7
F	-3	TYR	-	expression tag	UNP Q9X2B7
F	-2	PHE	-	expression tag	UNP Q9X2B7
F	-1	GLN	-	expression tag	UNP Q9X2B7
F	0	GLY	-	expression tag	UNP Q9X2B7
G	-6	ARG	-	expression tag	UNP Q9X2B7
G	-5	GLU	-	expression tag	UNP Q9X2B7
G	-4	LEU	-	expression tag	UNP Q9X2B7
G	-3	TYR	-	expression tag	UNP Q9X2B7
G	-2	PHE	-	expression tag	UNP Q9X2B7
G	-1	GLN	-	expression tag	UNP Q9X2B7
G	0	GLY	-	expression tag	UNP Q9X2B7
H	-6	ARG	-	expression tag	UNP Q9X2B7
H	-5	GLU	-	expression tag	UNP Q9X2B7
H	-4	LEU	-	expression tag	UNP Q9X2B7
H	-3	TYR	-	expression tag	UNP Q9X2B7
H	-2	PHE	-	expression tag	UNP Q9X2B7
H	-1	GLN	-	expression tag	UNP Q9X2B7

Continued on next page...

Continued from previous page...

Chain	Residue	Modelled	Actual	Comment	Reference
H	0	GLY	-	expression tag	UNP Q9X2B7

- Molecule 2 is water.

Mol	Chain	Residues	Atoms		ZeroOcc	AltConf
			Total	O		
2	A	11	11	11	0	0
2	B	8	8	8	0	0
2	C	9	9	9	0	0
2	D	18	18	18	0	0
2	E	30	30	30	0	0
2	F	23	23	23	0	0
2	G	18	18	18	0	0
2	H	16	16	16	0	0

3 Residue-property plots (i)

These plots are drawn for all protein, RNA, DNA and oligosaccharide chains in the entry. The first graphic for a chain summarises the proportions of the various outlier classes displayed in the second graphic. The second graphic shows the sequence view annotated by issues in geometry and electron density. Residues are color-coded according to the number of geometric quality criteria for which they contain at least one outlier: green = 0, yellow = 1, orange = 2 and red = 3 or more. A red dot above a residue indicates a poor fit to the electron density (RSRZ > 2). Stretches of 2 or more consecutive residues without any outlier are shown as a green connector. Residues present in the sample, but not in the model, are shown in grey.

• Molecule 1: CRISPR-associated endonuclease Cas1

Chain A: 5% 70% 23% • 5%

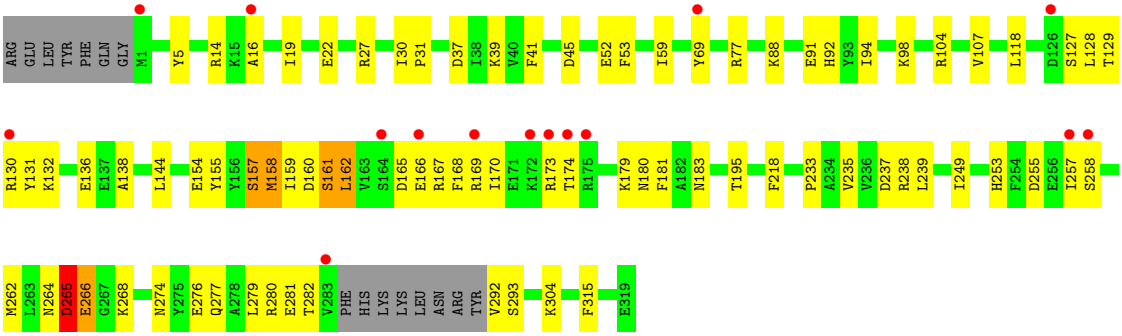

• Molecule 1: CRISPR-associated endonuclease Cas1

Chain B: 4% 76% 19% 5%

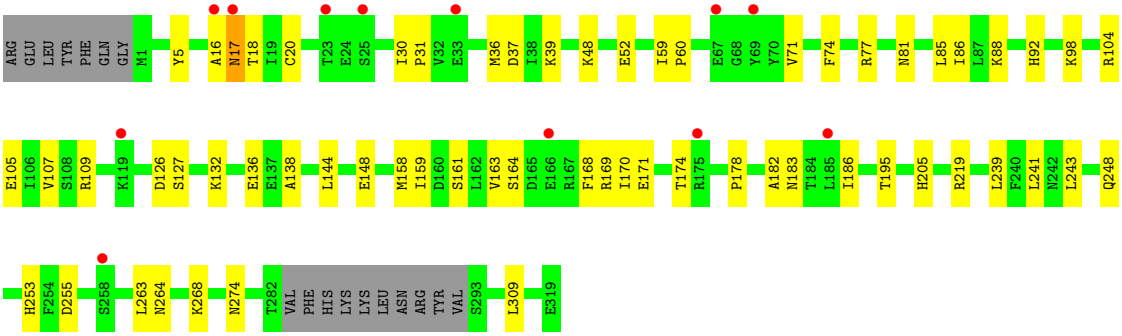

• Molecule 1: CRISPR-associated endonuclease Cas1

Chain C: 6% 68% 23% 9%

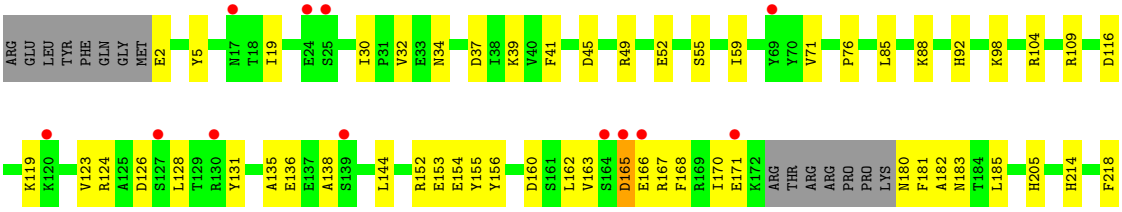

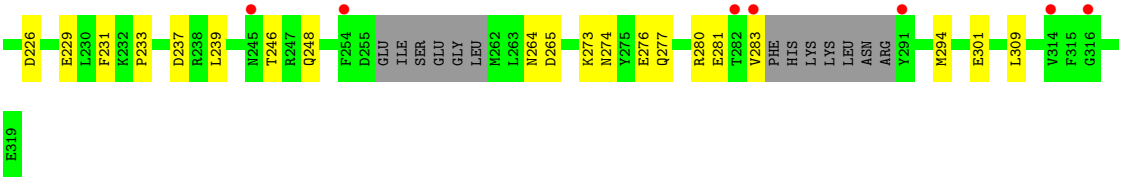

• Molecule 1: CRISPR-associated endonuclease Cas1

Chain D:

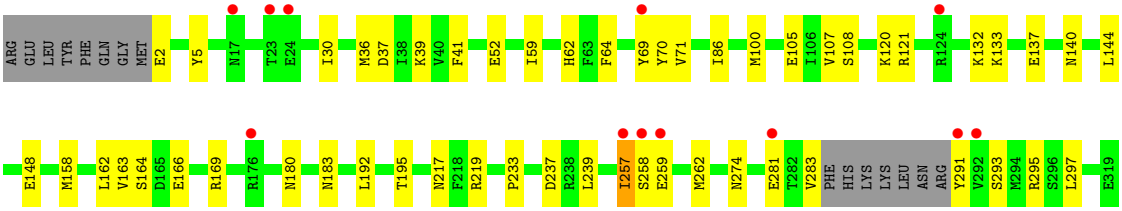

• Molecule 1: CRISPR-associated endonuclease Cas1

Chain E:

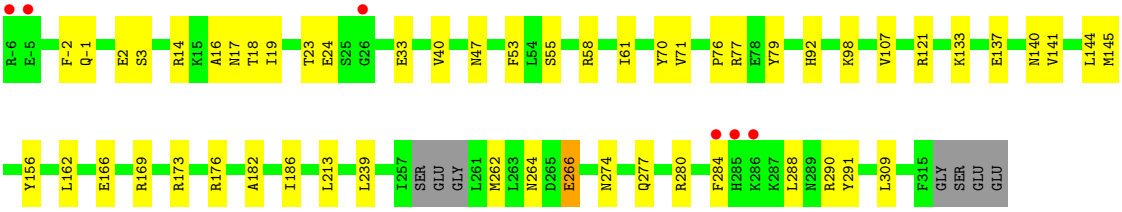

• Molecule 1: CRISPR-associated endonuclease Cas1

Chain F:

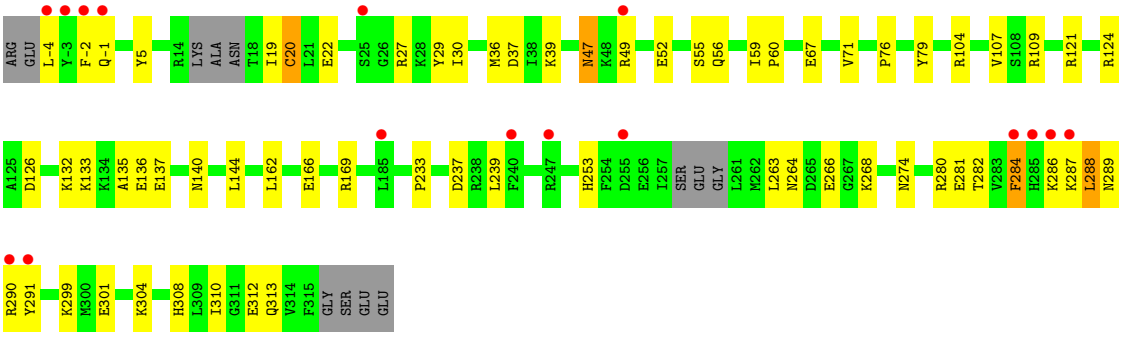

• Molecule 1: CRISPR-associated endonuclease Cas1

Chain G:

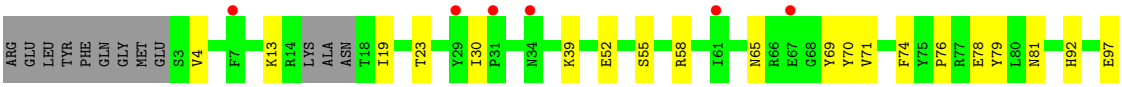

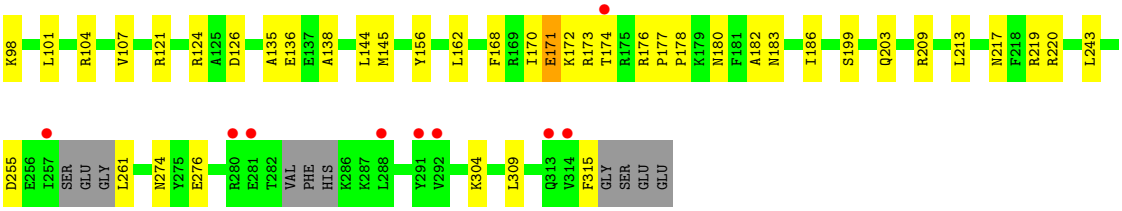

- Molecule 1: CRISPR-associated endonuclease Cas1

Chain H:

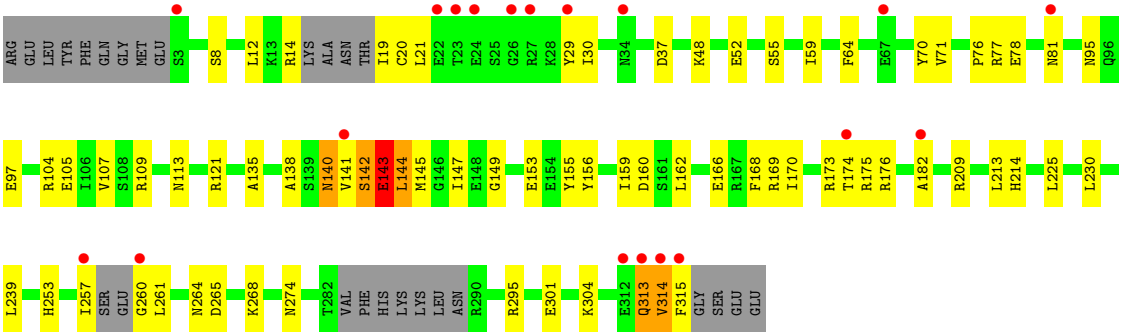

4 Data and refinement statistics (i)

Property	Value	Source
Space group	P 1	Depositor
Cell constants a, b, c, α, β, γ	92.28Å 94.56Å 106.39Å 93.03° 115.06° 102.97°	Depositor
Resolution (Å)	19.85 – 2.70 19.85 – 2.70	Depositor EDS
% Data completeness (in resolution range)	97.6 (19.85-2.70) 97.6 (19.85-2.70)	Depositor EDS
R_{merge}	0.08	Depositor
R_{sym}	0.07	Depositor
$< I/\sigma(I) >$ [1]	3.09 (at 2.71Å)	Xtriage
Refinement program	PHENIX (phenix.refine: dev_1702)	Depositor
R, R_{free}	0.183 , 0.230 0.187 , 0.231	Depositor DCC
R_{free} test set	4202 reflections (5.02%)	wwPDB-VP
Wilson B-factor (Å^2)	56.9	Xtriage
Anisotropy	0.346	Xtriage
Bulk solvent k_{sol}(e/Å^3), B_{sol}(Å^2)	0.33 , 64.8	EDS
L-test for twinning[2]	$< \|L\| > = 0.49$, $< L^2 > = 0.32$	Xtriage
Estimated twinning fraction	No twinning to report.	Xtriage
F_o,F_c correlation	0.95	EDS
Total number of atoms	20014	wwPDB-VP
Average B, all atoms (Å^2)	76.0	wwPDB-VP

Xtriage's analysis on translational NCS is as follows: *The largest off-origin peak in the Patterson function is 4.74% of the height of the origin peak. No significant pseudotranslation is detected.*

[1] Intensities estimated from amplitudes.

[2] Theoretical values of $< |L| >$, $< L^2 >$ for acentric reflections are 0.5, 0.333 respectively for untwinned datasets, and 0.375, 0.2 for perfectly twinned datasets.

5 Model quality (i)

5.1 Standard geometry (i)

The Z score for a bond length (or angle) is the number of standard deviations the observed value is removed from the expected value. A bond length (or angle) with $|Z| > 5$ is considered an outlier worth inspection. RMSZ is the root-mean-square of all Z scores of the bond lengths (or angles).

Mol	Chain	Bond lengths		Bond angles	
		RMSZ	$\#\|Z\|>5$	RMSZ	$\#\|Z\|>5$
1	A	0.37	0/2522	0.57	0/3402
1	B	0.33	0/2505	0.54	0/3380
1	C	0.36	0/2425	0.59	0/3269
1	D	0.33	0/2534	0.50	0/3417
1	E	0.30	0/2660	0.48	0/3581
1	F	0.33	0/2616	0.54	1/3523 (0.0%)
1	G	0.33	0/2513	0.54	0/3385
1	H	0.33	0/2490	0.59	3/3351 (0.1%)
All	All	0.33	0/20265	0.54	4/27308 (0.0%)

Chiral center outliers are detected by calculating the chiral volume of a chiral center and verifying if the center is modelled as a planar moiety or with the opposite hand.A planarity outlier is detected by checking planarity of atoms in a peptide group, atoms in a mainchain group or atoms of a sidechain that are expected to be planar.

Mol	Chain	#Chirality outliers	#Planarity outliers
1	A	0	2
1	B	0	1
1	C	0	2
1	D	0	1
1	G	0	1
1	H	0	2
All	All	0	9

There are no bond length outliers.

All (4) bond angle outliers are listed below:

Mol	Chain	Res	Type	Atoms	Z	Observed(^{o})	Ideal(^{o})
1	H	144	LEU	CA-CB-CG	6.34	129.88	115.30
1	F	288	LEU	N-CA-C	-5.89	95.09	111.00
1	H	143	GLU	CA-CB-CG	5.43	125.35	113.40
1	H	140	ASN	N-CA-C	-5.01	97.47	111.00

There are no chirality outliers.

All (9) planarity outliers are listed below:

Mol	Chain	Res	Type	Group
1	A	16	ALA	Peptide
1	A	265	ASP	Peptide
1	B	16	ALA	Peptide
1	C	126	ASP	Peptide
1	C	165	ASP	Peptide
1	D	257	ILE	Peptide
1	G	65	ASN	Peptide
1	H	142	SER	Peptide
1	H	313	GLN	Peptide

5.2 Too-close contacts (i)

In the following table, the Non-H and H(model) columns list the number of non-hydrogen atoms and hydrogen atoms in the chain respectively. The H(added) column lists the number of hydrogen atoms added and optimized by MolProbity. The Clashes column lists the number of clashes within the asymmetric unit, whereas Symm-Clashes lists symmetry-related clashes.

Mol	Chain	Non-H	H(model)	H(added)	Clashes	Symm-Clashes
1	A	2476	0	2405	68	0
1	B	2459	0	2386	43	0
1	C	2382	0	2310	53	0
1	D	2487	0	2426	38	0
1	E	2609	0	2567	41	0
1	F	2562	0	2528	48	1
1	G	2465	0	2421	51	1
1	H	2441	0	2404	66	0
2	A	11	0	0	0	0
2	B	8	0	0	0	0
2	C	9	0	0	1	0
2	D	18	0	0	0	0
2	E	30	0	0	1	0
2	F	23	0	0	2	0
2	G	18	0	0	0	0
2	H	16	0	0	3	0
All	All	20014	0	19447	376	1

The all-atom clashscore is defined as the number of clashes found per 1000 atoms (including hydrogen atoms). The all-atom clashscore for this structure is 10.

All (376) close contacts within the same asymmetric unit are listed below, sorted by their clash

magnitude.

Atom-1	Atom-2	Interatomic distance (Å)	Clash overlap (Å)
1:A:255:ASP:OD1	1:A:264:ASN:ND2	1.84	1.09
1:A:154:GLU:OE2	1:A:158:MET:CE	2.00	1.09
1:G:92:HIS:ND1	1:G:98:LYS:HD3	1.75	1.01
1:D:100:MET:HE1	1:D:140:ASN:HA	1.46	0.97
1:A:154:GLU:OE2	1:A:158:MET:HE1	1.66	0.94
1:A:154:GLU:OE2	1:A:158:MET:HE3	1.71	0.91
1:E:-1:GLN:NE2	1:F:36:MET:SD	2.50	0.85
1:H:143:GLU:CG	1:H:144:LEU:H	1.91	0.84
1:F:282:THR:HG21	1:F:291:TYR:HD2	1.45	0.82
1:G:92:HIS:HD2	1:G:309:LEU:HD23	1.42	0.81
1:D:239:LEU:HD11	1:D:274:ASN:HB3	1.62	0.81
1:E:92:HIS:CD2	1:E:309:LEU:HD23	2.17	0.79
1:C:109:ARG:NH2	1:C:301:GLU:OE2	2.15	0.79
1:C:273:LYS:HA	1:C:276:GLU:HB2	1.64	0.79
1:G:104:ARG:NH1	1:G:135:ALA:O	2.16	0.78
1:E:166:GLU:HA	1:E:169:ARG:HG3	1.65	0.77
1:H:140:ASN:OD1	1:H:143:GLU:HB3	1.85	0.76
1:A:255:ASP:OD1	1:A:264:ASN:CG	2.24	0.76
1:C:104:ARG:NH1	1:C:135:ALA:O	2.20	0.75
1:C:153:GLU:HA	1:C:156:TYR:HD2	1.52	0.74
1:B:52:GLU:HG2	1:G:71:VAL:HG11	1.70	0.74
1:D:163:VAL:O	1:D:169:ARG:NH2	2.22	0.72
1:E:288:LEU:HB3	1:E:290:ARG:HD2	1.71	0.72
1:A:157:SER:O	1:A:159:ILE:N	2.22	0.71
1:C:170:ILE:HG23	1:C:183:ASN:HD21	1.54	0.71
1:B:169:ARG:NH2	1:B:171:GLU:OE2	2.23	0.71
1:C:170:ILE:O	1:C:171:GLU:HG2	1.91	0.70
1:A:170:ILE:HG23	1:A:183:ASN:HD21	1.54	0.70
1:H:107:VAL:HG21	1:H:144:LEU:HG	1.73	0.70
1:D:257:ILE:HG22	1:D:258:SER:HB3	1.74	0.69
1:F:22:GLU:HG2	1:F:27:ARG:HG2	1.75	0.69
1:B:105:GLU:OE2	1:B:109:ARG:NH1	2.24	0.69
1:F:282:THR:HG21	1:F:291:TYR:CD2	2.26	0.69
1:G:92:HIS:CD2	1:G:309:LEU:HD23	2.26	0.69
1:C:45:ASP:HA	1:F:47:ASN:HB3	1.75	0.68
1:C:264:ASN:OD1	1:C:265:ASP:N	2.27	0.68
1:C:92:HIS:CD2	1:C:309:LEU:HD23	2.29	0.68
1:H:20:CYS:HB3	1:H:29:TYR:CD1	2.28	0.68
1:C:239:LEU:HD11	1:C:274:ASN:HB3	1.74	0.68
1:F:239:LEU:HD11	1:F:274:ASN:HB3	1.76	0.67
1:H:143:GLU:HG2	1:H:144:LEU:H	1.58	0.67

Continued on next page...

Continued from previous page...

Atom-1	Atom-2	Interatomic distance (Å)	Clash overlap (Å)
1:D:258:SER:OG	1:D:259:GLU:N	2.28	0.67
1:A:255:ASP:OD1	1:A:264:ASN:OD1	2.13	0.66
1:A:257:ILE:O	1:A:258:SER:OG	2.13	0.66
1:G:92:HIS:HD2	1:G:309:LEU:CD2	2.07	0.66
1:G:39:LYS:NZ	1:G:203:GLN:O	2.28	0.66
1:H:265:ASP:OD2	2:H:410:HOH:O	2.13	0.66
1:A:104:ARG:NH2	1:A:138:ALA:O	2.25	0.66
1:A:19:ILE:HB	1:A:30:ILE:HG23	1.78	0.65
1:D:105:GLU:OE1	1:E:176:ARG:NH1	2.28	0.65
1:E:3:SER:HB2	1:F:-1:GLN:HE21	1.62	0.65
1:B:174:THR:HG22	1:B:183:ASN:HD22	1.60	0.64
1:D:257:ILE:HD11	1:D:262:MET:SD	2.37	0.64
1:A:154:GLU:O	1:A:157:SER:HB2	1.98	0.64
1:H:239:LEU:HD11	1:H:274:ASN:HB3	1.80	0.64
1:C:277:GLN:HA	1:C:280:ARG:H	1.61	0.64
1:E:55:SER:HA	1:E:76:PRO:HB3	1.80	0.63
1:H:14:ARG:HA	1:H:19:ILE:HG22	1.79	0.63
1:C:180:ASN:OD1	1:C:181:PHE:N	2.32	0.63
1:D:107:VAL:HG21	1:D:144:LEU:HG	1.80	0.63
1:C:128:LEU:HA	1:C:131:TYR:HD2	1.64	0.63
1:E:92:HIS:HD2	1:E:309:LEU:HD23	1.64	0.62
1:D:52:GLU:HG2	1:H:71:VAL:HG11	1.78	0.62
1:A:239:LEU:HD11	1:A:274:ASN:HB3	1.82	0.62
1:B:255:ASP:OD2	1:B:264:ASN:ND2	2.32	0.62
1:G:55:SER:HA	1:G:76:PRO:HB3	1.82	0.62
1:G:180:ASN:HA	1:G:261:LEU:HD23	1.81	0.62
1:H:143:GLU:CD	1:H:144:LEU:H	2.02	0.62
1:F:289:ASN:O	1:F:290:ARG:HG2	2.00	0.61
1:H:314:VAL:HG13	1:H:315:PHE:N	2.15	0.61
1:B:92:HIS:CD2	1:B:309:LEU:HD23	2.35	0.60
1:F:124:ARG:NH1	1:F:126:ASP:OD2	2.33	0.60
1:E:239:LEU:HD11	1:E:274:ASN:HB3	1.84	0.60
1:G:243:LEU:HD21	1:G:274:ASN:ND2	2.16	0.60
1:A:304:LYS:HE3	1:A:315:PHE:HE1	1.66	0.59
1:C:49:ARG:HG2	1:C:49:ARG:HH11	1.67	0.59
1:G:304:LYS:HE3	1:G:315:PHE:CE1	2.37	0.59
1:D:257:ILE:HG13	1:D:262:MET:HB3	1.82	0.59
1:C:152:ARG:HG3	1:C:156:TYR:CE2	2.38	0.59
1:F:286:LYS:O	1:F:287:LYS:HB2	2.02	0.59
1:H:295:ARG:NH1	2:H:406:HOH:O	2.29	0.59
1:G:58:ARG:NH2	1:G:78:GLU:OE2	2.35	0.59

Continued on next page...

Continued from previous page...

Atom-1	Atom-2	Interatomic distance (Å)	Clash overlap (Å)
1:C:277:GLN:O	1:C:281:GLU:HB2	2.02	0.59
1:B:107:VAL:HG21	1:B:144:LEU:HG	1.85	0.58
1:H:174:THR:HG23	1:H:176:ARG:H	1.67	0.58
1:E:33:GLU:OE1	1:F:304:LYS:NZ	2.35	0.58
1:B:239:LEU:HD11	1:B:274:ASN:HB3	1.84	0.58
1:H:55:SER:HA	1:H:76:PRO:HB3	1.85	0.58
1:C:218:PHE:N	2:C:403:HOH:O	2.36	0.58
1:B:159:ILE:HG23	1:B:241:LEU:HD21	1.84	0.58
1:D:180:ASN:OD1	1:D:183:ASN:HB2	2.04	0.58
1:A:107:VAL:HG21	1:A:144:LEU:HG	1.86	0.58
1:F:67:GLU:OE1	1:F:67:GLU:N	2.36	0.58
1:H:104:ARG:NH2	1:H:138:ALA:O	2.37	0.58
1:E:2:GLU:CG	1:F:-4:LEU:CD2	2.53	0.58
1:G:171:GLU:OE2	1:G:180:ASN:ND2	2.36	0.58
1:G:173:ARG:NH1	1:G:183:ASN:OD1	2.35	0.57
1:F:20:CYS:HG	1:F:29:TYR:HE1	1.50	0.57
1:A:159:ILE:O	1:A:161:SER:N	2.38	0.57
1:D:2:GLU:HB2	1:D:295:ARG:HH12	1.69	0.57
1:D:71:VAL:HG11	1:H:52:GLU:HG2	1.86	0.57
1:C:52:GLU:HG2	1:F:71:VAL:HG11	1.87	0.57
1:H:143:GLU:OE2	1:H:144:LEU:HB2	2.05	0.57
1:G:243:LEU:HD21	1:G:274:ASN:HD21	1.69	0.57
1:C:19:ILE:HG13	1:C:30:ILE:HB	1.86	0.56
1:A:165:ASP:HB3	1:A:168:PHE:HB2	1.87	0.56
1:A:257:ILE:HG22	1:A:258:SER:N	2.19	0.56
1:B:30:ILE:HD12	1:B:31:PRO:HD2	1.88	0.56
1:F:37:ASP:OD2	1:F:39:LYS:NZ	2.38	0.56
1:A:174:THR:N	1:A:183:ASN:OD1	2.38	0.56
1:G:104:ARG:NH2	1:G:138:ALA:O	2.38	0.56
1:C:123:VAL:HG21	1:C:162:LEU:HD11	1.87	0.56
1:A:233:PRO:HA	1:A:237:ASP:HB2	1.88	0.56
1:A:37:ASP:OD2	1:A:39:LYS:NZ	2.38	0.55
1:C:160:ASP:HA	1:C:163:VAL:HG23	1.88	0.55
1:A:30:ILE:HD12	1:A:31:PRO:HD2	1.89	0.55
1:A:159:ILE:O	1:A:160:ASP:C	2.43	0.55
1:C:165:ASP:O	1:C:167:ARG:N	2.40	0.55
1:B:85:LEU:HD22	1:B:205:HIS:HB2	1.89	0.55
1:D:120:LYS:HE2	1:D:121:ARG:NH1	2.22	0.55
1:G:170:ILE:C	1:G:171:GLU:CG	2.75	0.55
1:G:255:ASP:O	1:G:261:LEU:HD12	2.07	0.55
1:H:105:GLU:HB2	1:H:315:PHE:HB2	1.88	0.55

Continued on next page...

Continued from previous page...

Atom-1	Atom-2	Interatomic distance (Å)	Clash overlap (Å)
1:C:32:VAL:HG23	1:C:59:ILE:HD11	1.87	0.55
1:G:171:GLU:OE1	1:G:178:PRO:HG2	2.07	0.54
1:F:263:LEU:O	1:F:268:LYS:NZ	2.36	0.54
1:F:166:GLU:HA	1:F:169:ARG:HG3	1.90	0.54
1:C:2:GLU:HG2	1:C:34:ASN:O	2.08	0.54
1:B:219:ARG:NH1	1:G:81:ASN:HD21	2.07	0.53
1:C:165:ASP:CB	1:C:168:PHE:HB2	2.39	0.53
1:E:3:SER:HB2	1:F:-1:GLN:NE2	2.22	0.53
1:E:264:ASN:OD1	1:E:266:GLU:HG3	2.09	0.53
1:C:153:GLU:HA	1:C:156:TYR:CD2	2.39	0.53
1:D:166:GLU:HA	1:D:169:ARG:HG2	1.89	0.53
1:H:313:GLN:CD	1:H:314:VAL:H	2.12	0.53
1:E:23:THR:HG23	1:E:24:GLU:O	2.09	0.53
1:G:174:THR:HG23	1:G:176:ARG:H	1.73	0.53
1:H:143:GLU:CG	1:H:144:LEU:N	2.67	0.53
1:A:282:THR:HG23	1:A:292:VAL:N	2.24	0.53
1:D:257:ILE:HG22	1:D:258:SER:CB	2.39	0.53
1:G:217:ASN:OD1	1:G:219:ARG:HB3	2.08	0.53
1:H:78:GLU:OE2	2:H:415:HOH:O	2.18	0.52
1:H:140:ASN:ND2	1:H:142:SER:OG	2.42	0.52
1:D:62:HIS:CG	1:D:195:THR:HG23	2.43	0.52
1:H:166:GLU:HG2	1:H:169:ARG:HD2	1.92	0.52
1:E:2:GLU:HG2	1:F:-4:LEU:CD2	2.40	0.52
1:A:257:ILE:CG2	1:A:258:SER:N	2.73	0.52
1:C:152:ARG:O	1:C:155:TYR:HB3	2.09	0.52
1:C:214:HIS:ND1	1:C:226:ASP:OD1	2.29	0.52
1:D:120:LYS:HE2	1:D:121:ARG:HH12	1.73	0.52
1:F:19:ILE:HG13	1:F:30:ILE:HG13	1.90	0.52
1:G:58:ARG:HB3	1:G:79:TYR:HA	1.92	0.52
1:H:105:GLU:OE2	1:H:109:ARG:NH2	2.42	0.52
1:A:277:GLN:HA	1:A:280:ARG:HG2	1.92	0.51
1:B:71:VAL:HG11	1:G:52:GLU:HG2	1.92	0.51
1:B:158:MET:O	1:B:161:SER:OG	2.26	0.51
1:H:253:HIS:HA	1:H:264:ASN:HD21	1.76	0.51
1:C:37:ASP:OD2	1:C:39:LYS:NZ	2.40	0.51
1:A:14:ARG:HD3	1:A:53:PHE:CD1	2.46	0.51
1:B:37:ASP:HA	1:B:59:ILE:HG23	1.93	0.50
1:F:140:ASN:ND2	2:F:416:HOH:O	2.43	0.50
1:F:107:VAL:HG21	1:F:144:LEU:HG	1.92	0.50
1:G:171:GLU:OE2	1:G:180:ASN:OD1	2.30	0.50
1:E:58:ARG:HB3	1:E:79:TYR:HA	1.92	0.50

Continued on next page...

Continued from previous page...

Atom-1	Atom-2	Interatomic distance (Å)	Clash overlap (Å)
1:F:133:LYS:O	1:F:137:GLU:HG2	2.12	0.50
1:G:170:ILE:C	1:G:171:GLU:HG3	2.31	0.50
1:H:143:GLU:CD	1:H:144:LEU:HB2	2.31	0.50
1:A:238:ARG:NH2	1:A:281:GLU:OE1	2.44	0.50
1:H:143:GLU:HG2	1:H:144:LEU:N	2.24	0.50
1:C:92:HIS:ND1	1:C:98:LYS:HD3	2.27	0.50
1:C:71:VAL:HG11	1:F:52:GLU:HG2	1.93	0.50
1:C:85:LEU:HD22	1:C:205:HIS:HB2	1.93	0.50
1:C:116:ASP:HA	1:C:119:LYS:HB2	1.93	0.50
1:G:121:ARG:HD3	1:G:162:LEU:HD13	1.92	0.50
1:H:104:ARG:NH1	1:H:135:ALA:O	2.45	0.50
1:A:255:ASP:CG	1:A:264:ASN:OD1	2.51	0.49
1:F:310:ILE:HD11	1:F:312:GLU:OE2	2.12	0.49
1:F:308:HIS:HA	1:F:313:GLN:HB3	1.93	0.49
1:G:156:TYR:CE2	1:G:173:ARG:HD3	2.47	0.49
1:G:124:ARG:HH12	1:H:169:ARG:HH12	1.61	0.49
1:D:2:GLU:HB2	1:D:295:ARG:NH1	2.27	0.49
1:A:52:GLU:HG2	1:E:71:VAL:HG11	1.95	0.48
1:H:155:TYR:O	1:H:159:ILE:HG12	2.12	0.48
1:B:170:ILE:HG23	1:B:183:ASN:OD1	2.13	0.48
1:G:170:ILE:O	1:G:170:ILE:HG22	2.14	0.48
1:B:263:LEU:O	1:B:268:LYS:HE3	2.13	0.48
1:H:141:VAL:C	1:H:143:GLU:OE1	2.52	0.48
1:G:92:HIS:CD2	1:G:309:LEU:CD2	2.91	0.48
1:A:165:ASP:O	1:A:167:ARG:N	2.46	0.48
1:C:170:ILE:HG12	1:C:182:ALA:HB3	1.96	0.48
1:H:20:CYS:HB3	1:H:29:TYR:CE1	2.48	0.48
1:A:218:PHE:HB3	2:E:407:HOH:O	2.13	0.48
1:C:233:PRO:HA	1:C:237:ASP:HB2	1.96	0.48
1:A:128:LEU:HA	1:A:131:TYR:HD2	1.79	0.48
1:F:284:PHE:HD2	1:F:284:PHE:N	2.11	0.48
1:F:284:PHE:N	1:F:284:PHE:CD2	2.81	0.48
1:D:41:PHE:HZ	1:D:192:LEU:HD21	1.79	0.48
1:C:123:VAL:HG12	1:C:124:ARG:H	1.79	0.47
1:H:121:ARG:HD3	1:H:162:LEU:HD13	1.95	0.47
1:H:12:LEU:HA	1:H:20:CYS:O	2.14	0.47
1:A:5:TYR:CE2	1:A:39:LYS:HD2	2.49	0.47
1:D:69:TYR:OH	1:H:77:ARG:HD3	2.13	0.47
1:B:81:ASN:HD22	1:G:220:ARG:HH21	1.63	0.47
1:H:166:GLU:C	1:H:168:PHE:H	2.18	0.47
1:H:253:HIS:HA	1:H:264:ASN:ND2	2.28	0.47

Continued on next page...

Continued from previous page...

Atom-1	Atom-2	Interatomic distance (Å)	Clash overlap (Å)
1:C:170:ILE:HG23	1:C:183:ASN:ND2	2.24	0.47
1:G:276:GLU:N	1:G:276:GLU:OE1	2.47	0.47
1:H:257:ILE:O	1:H:260:GLY:N	2.47	0.47
1:E:133:LYS:O	1:E:137:GLU:HG3	2.14	0.47
1:E:284:PHE:HB2	1:E:291:TYR:CE1	2.50	0.47
1:F:55:SER:HA	1:F:76:PRO:HB3	1.96	0.47
1:H:155:TYR:CE1	1:H:159:ILE:HD11	2.50	0.47
1:A:77:ARG:NH1	1:E:70:TYR:O	2.42	0.47
1:C:5:TYR:CE2	1:C:39:LYS:HD2	2.50	0.47
1:F:52:GLU:O	1:F:56:GLN:HG3	2.15	0.47
1:H:20:CYS:HB3	1:H:29:TYR:HD1	1.80	0.47
1:H:105:GLU:OE2	1:H:109:ARG:NE	2.47	0.47
1:H:301:GLU:OE2	1:H:304:LYS:NZ	2.45	0.47
1:A:5:TYR:HD2	1:A:41:PHE:HE2	1.63	0.46
1:E:107:VAL:HG21	1:E:144:LEU:HG	1.97	0.46
1:G:19:ILE:HG13	1:G:30:ILE:O	2.15	0.46
1:A:92:HIS:CE1	1:A:98:LYS:HD3	2.50	0.46
1:D:217:ASN:HB2	1:D:219:ARG:H	1.80	0.46
1:A:255:ASP:CG	1:A:264:ASN:HD21	2.09	0.46
1:B:239:LEU:O	1:B:243:LEU:HB2	2.15	0.46
1:A:157:SER:C	1:A:159:ILE:H	2.18	0.46
1:B:253:HIS:O	1:B:263:LEU:HD12	2.15	0.46
1:G:69:TYR:HD1	1:G:199:SER:HB3	1.80	0.46
1:B:178:PRO:HB3	1:B:183:ASN:O	2.15	0.46
1:H:145:MET:CE	1:H:213:LEU:HG	2.46	0.46
1:B:39:LYS:HE3	1:B:195:THR:OG1	2.16	0.46
1:D:5:TYR:CZ	1:D:39:LYS:HD2	2.51	0.46
1:A:281:GLU:O	1:A:293:SER:HA	2.16	0.45
1:C:104:ARG:NH2	1:C:138:ALA:O	2.47	0.45
1:H:8:SER:O	1:H:21:LEU:HD21	2.15	0.45
1:H:264:ASN:O	1:H:268:LYS:HG3	2.16	0.45
1:H:170:ILE:HG12	1:H:182:ALA:HB1	1.97	0.45
1:D:64:PHE:CE2	1:D:70:TYR:HB2	2.51	0.45
1:F:132:LYS:O	1:F:136:GLU:HG3	2.16	0.45
1:E:277:GLN:OE1	1:E:280:ARG:NH2	2.44	0.45
1:B:168:PHE:O	1:B:182:ALA:HB2	2.17	0.45
1:B:174:THR:H	1:B:183:ASN:ND2	2.15	0.45
1:B:219:ARG:CZ	1:G:81:ASN:HD21	2.30	0.45
1:E:2:GLU:HG2	1:F:-4:LEU:HD23	1.99	0.45
1:F:109:ARG:NH1	1:F:301:GLU:OE1	2.50	0.45
1:A:173:ARG:H	1:A:173:ARG:HG3	1.32	0.45

Continued on next page...

Continued from previous page...

Atom-1	Atom-2	Interatomic distance (Å)	Clash overlap (Å)
1:E:14:ARG:HA	1:E:19:ILE:HG22	1.97	0.45
1:E:16:ALA:HB3	1:E:18:THR:HG22	1.97	0.45
1:E:140:ASN:OD1	1:E:141:VAL:N	2.50	0.45
1:F:121:ARG:HD3	1:F:162:LEU:HD13	1.98	0.45
1:A:130:ARG:HD2	1:A:130:ARG:HA	1.61	0.45
1:B:92:HIS:CE1	1:B:98:LYS:HD3	2.52	0.45
1:D:37:ASP:HA	1:D:59:ILE:HG23	1.97	0.45
1:H:156:TYR:CE2	1:H:173:ARG:HD3	2.51	0.45
1:A:22:GLU:HG2	1:A:27:ARG:HG2	1.99	0.45
1:A:127:SER:C	1:A:129:THR:H	2.20	0.45
1:C:165:ASP:O	1:C:168:PHE:N	2.50	0.45
1:C:182:ALA:O	1:C:185:LEU:N	2.50	0.45
1:A:132:LYS:O	1:A:136:GLU:HG3	2.17	0.44
1:A:159:ILE:C	1:A:161:SER:N	2.69	0.44
1:A:69:TYR:OH	1:E:77:ARG:HD3	2.16	0.44
1:G:107:VAL:HG21	1:G:144:LEU:HG	2.00	0.44
1:A:118:LEU:HD11	1:A:155:TYR:HD1	1.81	0.44
1:E:92:HIS:CD2	1:E:309:LEU:CD2	2.96	0.44
1:C:88:LYS:HA	1:C:88:LYS:HD3	1.80	0.44
1:D:5:TYR:CE2	1:D:39:LYS:HD2	2.52	0.44
1:F:104:ARG:NH1	1:F:135:ALA:O	2.50	0.44
1:A:5:TYR:OH	1:A:276:GLU:OE2	2.24	0.44
1:F:5:TYR:OH	1:F:299:LYS:NZ	2.50	0.44
1:C:49:ARG:HG2	1:C:49:ARG:NH1	2.31	0.44
1:C:152:ARG:NH2	1:C:229:GLU:O	2.44	0.44
1:B:17:ASN:OD1	1:B:18:THR:HG22	2.17	0.44
1:F:109:ARG:NH2	2:F:420:HOH:O	2.51	0.44
1:A:45:ASP:OD1	1:E:47:ASN:HB3	2.18	0.43
1:C:5:TYR:HD2	1:C:41:PHE:HE2	1.66	0.43
1:E:-2:PHE:HB3	1:F:-2:PHE:HB3	1.99	0.43
1:G:97:GLU:O	1:G:101:LEU:HD13	2.18	0.43
1:A:157:SER:O	1:A:160:ASP:N	2.51	0.43
1:A:180:ASN:OD1	1:A:181:PHE:N	2.51	0.43
1:G:171:GLU:CD	1:G:180:ASN:HD21	2.20	0.43
1:A:157:SER:C	1:A:159:ILE:N	2.72	0.43
1:D:62:HIS:CD2	1:D:195:THR:HG23	2.53	0.43
1:E:145:MET:CE	1:E:213:LEU:HG	2.48	0.43
1:H:37:ASP:HA	1:H:59:ILE:HG23	2.00	0.43
1:A:235:VAL:O	1:A:239:LEU:HB2	2.19	0.43
1:B:248:GLN:O	1:B:253:HIS:HE1	2.00	0.43
1:D:2:GLU:O	1:D:36:MET:N	2.41	0.43

Continued on next page...

Continued from previous page...

Atom-1	Atom-2	Interatomic distance (Å)	Clash overlap (Å)
1:F:253:HIS:O	1:F:263:LEU:HD12	2.18	0.43
1:B:126:ASP:O	1:B:127:SER:OG	2.27	0.43
1:A:265:ASP:O	1:A:268:LYS:HB2	2.18	0.43
1:A:276:GLU:O	1:A:279:LEU:N	2.42	0.43
1:E:17:ASN:CB	1:F:287:LYS:HE2	2.49	0.43
1:E:156:TYR:CE2	1:E:173:ARG:HD3	2.54	0.43
1:A:174:THR:HG21	1:A:179:LYS:N	2.34	0.43
1:D:107:VAL:HG22	1:D:148:GLU:HG3	2.01	0.43
1:H:48:LYS:HE3	1:H:52:GLU:OE2	2.19	0.43
1:B:5:TYR:CZ	1:B:39:LYS:HD2	2.54	0.43
1:D:133:LYS:O	1:D:137:GLU:HG3	2.19	0.43
1:E:2:GLU:HG3	1:F:-2:PHE:CD1	2.54	0.43
1:H:301:GLU:CD	1:H:304:LYS:NZ	2.72	0.42
1:B:48:LYS:HE3	1:B:52:GLU:OE2	2.19	0.42
1:B:132:LYS:O	1:B:136:GLU:HG3	2.19	0.42
1:F:264:ASN:OD1	1:F:266:GLU:HG2	2.19	0.42
1:H:95:ASN:OD1	1:H:97:GLU:HG2	2.18	0.42
1:H:149:GLY:O	1:H:153:GLU:HG3	2.19	0.42
1:A:255:ASP:HB2	1:A:262:MET:HG2	2.02	0.42
1:B:92:HIS:ND1	1:B:98:LYS:HD3	2.34	0.42
1:D:233:PRO:HA	1:D:237:ASP:HB2	2.00	0.42
1:H:141:VAL:HG12	1:H:141:VAL:O	2.20	0.42
1:G:13:LYS:HD2	1:G:13:LYS:HA	1.46	0.42
1:A:88:LYS:HA	1:A:88:LYS:HD3	1.79	0.42
1:B:107:VAL:HG22	1:B:148:GLU:HG3	2.02	0.42
1:E:19:ILE:HG23	1:E:53:PHE:CE2	2.55	0.42
1:C:55:SER:HA	1:C:76:PRO:HB3	2.01	0.42
1:E:40:VAL:HG21	1:E:61:ILE:HD11	2.01	0.42
1:B:186:ILE:HD13	1:B:186:ILE:HA	1.80	0.42
1:C:183:ASN:HD22	1:C:183:ASN:H	1.68	0.42
1:F:233:PRO:HA	1:F:237:ASP:HB2	2.01	0.42
1:G:168:PHE:O	1:G:182:ALA:HB2	2.19	0.42
1:H:30:ILE:O	1:H:30:ILE:HG13	2.20	0.42
1:E:92:HIS:ND1	1:E:98:LYS:HD3	2.35	0.42
1:F:59:ILE:HA	1:F:60:PRO:HD3	1.92	0.42
1:H:113:ASN:ND2	1:H:230:LEU:O	2.43	0.42
1:B:104:ARG:NH2	1:B:138:ALA:O	2.53	0.42
1:D:108:SER:OG	1:D:132:LYS:NZ	2.53	0.42
1:C:123:VAL:HG12	1:C:124:ARG:N	2.33	0.41
1:D:283:VAL:O	1:D:291:TYR:HA	2.20	0.41
1:E:121:ARG:HD3	1:E:162:LEU:HD13	2.02	0.41

Continued on next page...

Continued from previous page...

Atom-1	Atom-2	Interatomic distance (Å)	Clash overlap (Å)
1:A:304:LYS:HE3	1:A:315:PHE:CE1	2.51	0.41
1:C:246:THR:HG23	1:C:248:GLN:HG3	2.02	0.41
1:G:4:VAL:HG11	1:G:30:ILE:HD13	2.02	0.41
1:H:144:LEU:HA	1:H:147:ILE:HB	2.02	0.41
1:A:166:GLU:O	1:A:169:ARG:HG3	2.21	0.41
1:A:264:ASN:HB3	1:A:266:GLU:HG3	2.02	0.41
1:B:88:LYS:HD3	1:B:88:LYS:HA	1.81	0.41
1:G:171:GLU:HB2	1:G:172:LYS:H	1.30	0.41
1:D:281:GLU:O	1:D:293:SER:HA	2.20	0.41
1:G:145:MET:CE	1:G:213:LEU:HG	2.50	0.41
1:A:37:ASP:HA	1:A:59:ILE:HG23	2.02	0.41
1:D:219:ARG:NE	1:H:81:ASN:OD1	2.43	0.41
1:F:144:LEU:HD12	1:F:144:LEU:HA	1.92	0.41
1:A:39:LYS:HE3	1:A:195:THR:OG1	2.20	0.41
1:D:162:LEU:HD23	1:D:162:LEU:HA	1.78	0.41
1:E:19:ILE:H	1:E:19:ILE:HG13	1.75	0.41
1:H:145:MET:HE2	1:H:213:LEU:HG	2.02	0.41
1:H:214:HIS:CE1	1:H:225:LEU:HB3	2.56	0.41
1:H:313:GLN:NE2	1:H:314:VAL:HB	2.35	0.41
1:B:77:ARG:HD3	1:G:70:TYR:O	2.21	0.41
1:G:19:ILE:HD11	1:G:30:ILE:HB	2.03	0.41
1:G:243:LEU:HD23	1:G:243:LEU:HA	1.83	0.41
1:H:174:THR:O	1:H:175:ARG:HB2	2.21	0.41
1:B:36:MET:O	1:B:60:PRO:HD2	2.21	0.41
1:B:74:PHE:HA	1:G:74:PHE:HA	2.02	0.41
1:B:86:ILE:HG13	1:G:209:ARG:CZ	2.51	0.41
1:E:182:ALA:O	1:E:186:ILE:HG12	2.21	0.41
1:H:64:PHE:CE2	1:H:70:TYR:HB2	2.55	0.41
1:H:314:VAL:CG1	1:H:315:PHE:N	2.84	0.41
1:A:91:GLU:HA	1:A:94:ILE:HG12	2.03	0.41
1:G:182:ALA:O	1:G:186:ILE:HG12	2.21	0.41
1:A:127:SER:O	1:A:128:LEU:HB2	2.20	0.40
1:C:32:VAL:HG23	1:C:59:ILE:CD1	2.50	0.40
1:F:76:PRO:HD2	1:F:79:TYR:HB3	2.02	0.40
1:H:153:GLU:HG2	1:H:173:ARG:O	2.21	0.40
1:H:160:ASP:HB3	1:H:169:ARG:NH2	2.35	0.40
1:C:104:ARG:NH1	1:C:136:GLU:HA	2.35	0.40
1:C:231:PHE:HD1	1:C:294:MET:HE1	1.87	0.40
1:G:177:PRO:HA	1:G:178:PRO:HD2	1.81	0.40
1:D:86:ILE:HG13	1:H:209:ARG:NE	2.37	0.40
1:D:297:LEU:HD23	1:D:297:LEU:HA	1.90	0.40

Continued on next page...

Continued from previous page...

Atom-1	Atom-2	Interatomic distance (Å)	Clash overlap (Å)
1:E:14:ARG:HE	1:E:53:PHE:HD1	1.70	0.40
1:A:249:ILE:HA	1:A:253:HIS:ND1	2.36	0.40
1:B:104:ARG:HA	1:B:144:LEU:HD21	2.03	0.40
1:B:163:VAL:HG12	1:B:164:SER:N	2.36	0.40
1:A:161:SER:O	1:A:162:LEU:CB	2.70	0.40
1:C:104:ARG:HG2	1:C:144:LEU:HD11	2.02	0.40
1:F:286:LYS:C	1:F:288:LEU:H	2.23	0.40

All (1) symmetry-related close contacts are listed below. The label for Atom-2 includes the symmetry operator and encoded unit-cell translations to be applied.

Atom-1	Atom-2	Interatomic distance (Å)	Clash overlap (Å)
1:F:280:ARG:NH1	1:G:23:THR:O[1_455]	2.13	0.07

5.3 Torsion angles (i)

5.3.1 Protein backbone (i)

In the following table, the Percentiles column shows the percent Ramachandran outliers of the chain as a percentile score with respect to all X-ray entries followed by that with respect to entries of similar resolution.

The Analysed column shows the number of residues for which the backbone conformation was analysed, and the total number of residues.

Mol	Chain	Analysed	Favoured	Allowed	Outliers	Percentiles
1	A	307/326 (94%)	284 (92%)	18 (6%)	5 (2%)	9 24
1	B	305/326 (94%)	294 (96%)	10 (3%)	1 (0%)	41 66
1	C	290/326 (89%)	275 (95%)	14 (5%)	1 (0%)	41 66
1	D	307/326 (94%)	298 (97%)	9 (3%)	0	100 100
1	E	315/326 (97%)	305 (97%)	10 (3%)	0	100 100
1	F	309/326 (95%)	298 (96%)	11 (4%)	0	100 100
1	G	297/326 (91%)	287 (97%)	10 (3%)	0	100 100
1	H	293/326 (90%)	280 (96%)	12 (4%)	1 (0%)	41 66
All	All	2423/2608 (93%)	2321 (96%)	94 (4%)	8 (0%)	41 66

All (8) Ramachandran outliers are listed below:

Mol	Chain	Res	Type
1	A	158	MET
1	C	166	GLU
1	A	157	SER
1	A	162	LEU
1	A	265	ASP
1	A	266	GLU
1	B	17	ASN
1	H	143	GLU

5.3.2 Protein sidechains (i)

In the following table, the Percentiles column shows the percent sidechain outliers of the chain as a percentile score with respect to all X-ray entries followed by that with respect to entries of similar resolution.

The Analysed column shows the number of residues for which the sidechain conformation was analysed, and the total number of residues.

Mol	Chain	Analysed	Rotameric	Outliers	Percentiles	
1	A	261/300 (87%)	260 (100%)	1 (0%)	91	97
1	B	261/300 (87%)	260 (100%)	1 (0%)	91	97
1	C	253/300 (84%)	251 (99%)	2 (1%)	81	93
1	D	264/300 (88%)	261 (99%)	3 (1%)	73	90
1	E	277/300 (92%)	275 (99%)	2 (1%)	84	94
1	F	273/300 (91%)	268 (98%)	5 (2%)	59	83
1	G	263/300 (88%)	260 (99%)	3 (1%)	73	90
1	H	261/300 (87%)	259 (99%)	2 (1%)	81	93
All	All	2113/2400 (88%)	2094 (99%)	19 (1%)	78	92

All (19) residues with a non-rotameric sidechain are listed below:

Mol	Chain	Res	Type
1	A	161	SER
1	B	20	CYS
1	C	154	GLU
1	C	283	VAL
1	D	30	ILE
1	D	158	MET
1	D	164	SER
1	E	262	MET

Continued on next page...

Continued from previous page...

Mol	Chain	Res	Type
1	E	266	GLU
1	F	20	CYS
1	F	47	ASN
1	F	49	ARG
1	F	281	GLU
1	F	284	PHE
1	G	126	ASP
1	G	136	GLU
1	G	171	GLU
1	H	261	LEU
1	H	314	VAL

Sometimes sidechains can be flipped to improve hydrogen bonding and reduce clashes. All (7) such sidechains are listed below:

Mol	Chain	Res	Type
1	C	183	ASN
1	D	92	HIS
1	F	-1	GLN
1	G	81	ASN
1	G	92	HIS
1	G	274	ASN
1	H	96	GLN

5.3.3 RNA (i)

There are no RNA molecules in this entry.

5.4 Non-standard residues in protein, DNA, RNA chains (i)

There are no non-standard protein/DNA/RNA residues in this entry.

5.5 Carbohydrates (i)

There are no monosaccharides in this entry.

5.6 Ligand geometry (i)

There are no ligands in this entry.

5.7 Other polymers (i)

There are no such residues in this entry.

5.8 Polymer linkage issues (i)

There are no chain breaks in this entry.

6 Fit of model and data (i)

6.1 Protein, DNA and RNA chains (i)

In the following table, the column labelled '#RSRZ> 2' contains the number (and percentage) of RSRZ outliers, followed by percent RSRZ outliers for the chain as percentile scores relative to all X-ray entries and entries of similar resolution. The OWAB column contains the minimum, median, 95th percentile and maximum values of the occupancy-weighted average B-factor per residue. The column labelled 'Q< 0.9' lists the number of (and percentage) of residues with an average occupancy less than 0.9.

Mol	Chain	Analysed	<RSRZ>	#RSRZ>2			OWAB(Å^2)	Q<0.9
1	A	311/326 (95%)	-0.00	15 (4%)	30	28	32, 81, 127, 154	0
1	B	309/326 (94%)	-0.05	12 (3%)	39	38	37, 81, 126, 142	0
1	C	298/326 (91%)	0.10	19 (6%)	19	18	35, 85, 133, 162	0
1	D	311/326 (95%)	-0.04	12 (3%)	39	38	36, 79, 126, 141	0
1	E	319/326 (97%)	-0.37	6 (1%)	66	69	32, 59, 100, 124	0
1	F	314/326 (96%)	-0.18	16 (5%)	28	26	34, 66, 108, 135	0
1	G	304/326 (93%)	-0.08	15 (4%)	29	28	38, 72, 108, 135	0
1	H	300/326 (92%)	0.03	19 (6%)	20	19	42, 76, 109, 134	0
All	All	2466/2608 (94%)	-0.08	114 (4%)	32	31	32, 74, 122, 162	0

All (114) RSRZ outliers are listed below:

Mol	Chain	Res	Type	RSRZ
1	F	291	TYR	6.2
1	A	257	ILE	5.9
1	H	315	PHE	5.4
1	A	258	SER	5.3
1	H	34	ASN	5.2
1	C	24	GLU	4.9
1	A	174	THR	4.8
1	C	171	GLU	4.3
1	G	29	TYR	4.2
1	F	284	PHE	4.0
1	C	69	TYR	3.9
1	D	258	SER	3.8
1	D	23	THR	3.8
1	G	314	VAL	3.8
1	H	174	THR	3.8
1	H	314	VAL	3.8

Continued on next page...

Continued from previous page...

Mol	Chain	Res	Type	RSRZ
1	G	313	GLN	3.7
1	F	285	HIS	3.6
1	D	291	TYR	3.6
1	B	17	ASN	3.5
1	D	176	ARG	3.5
1	B	23	THR	3.4
1	A	169	ARG	3.3
1	F	-4	LEU	3.3
1	G	31	PRO	3.3
1	A	166	GLU	3.3
1	C	17	ASN	3.2
1	B	33	GLU	3.2
1	H	23	THR	3.2
1	C	254	PHE	3.1
1	C	25	SER	3.1
1	D	124	ARG	3.1
1	D	69	TYR	3.1
1	F	185	LEU	3.0
1	D	24	GLU	3.0
1	E	284	PHE	3.0
1	G	174	THR	2.9
1	H	27	ARG	2.9
1	C	282	THR	2.9
1	H	22	GLU	2.8
1	C	130	ARG	2.8
1	G	7	PHE	2.8
1	F	290	ARG	2.8
1	A	164	SER	2.8
1	H	29	TYR	2.8
1	D	17	ASN	2.8
1	F	-3	TYR	2.7
1	D	257	ILE	2.7
1	H	257	ILE	2.7
1	A	16	ALA	2.7
1	C	166	GLU	2.7
1	H	260	GLY	2.7
1	G	257	ILE	2.7
1	D	281	GLU	2.7
1	E	-6	ARG	2.7
1	H	3	SER	2.7
1	H	26	GLY	2.7
1	A	173	ARG	2.7

Continued on next page...

Continued from previous page...

Mol	Chain	Res	Type	RSRZ
1	B	25	SER	2.7
1	F	240	PHE	2.6
1	A	283	VAL	2.6
1	G	288	LEU	2.6
1	B	69	TYR	2.6
1	C	164	SER	2.6
1	A	1	MET	2.6
1	C	316	GLY	2.6
1	F	-2	PHE	2.6
1	F	287	LYS	2.5
1	A	172	LYS	2.5
1	C	291	TYR	2.5
1	E	26	GLY	2.5
1	F	25	SER	2.5
1	C	245	ASN	2.5
1	B	119	LYS	2.5
1	D	259	GLU	2.4
1	H	182	ALA	2.4
1	A	175	ARG	2.4
1	E	-5	GLU	2.4
1	C	283	VAL	2.4
1	H	141	VAL	2.4
1	E	285	HIS	2.4
1	B	258	SER	2.4
1	C	314	VAL	2.4
1	F	49	ARG	2.3
1	H	24	GLU	2.3
1	G	281	GLU	2.3
1	A	69	TYR	2.3
1	B	166	GLU	2.3
1	F	247	ARG	2.3
1	D	292	VAL	2.3
1	G	292	VAL	2.2
1	F	255	ASP	2.2
1	H	312	GLU	2.2
1	B	185	LEU	2.2
1	A	126	ASP	2.2
1	C	165	ASP	2.2
1	G	280	ARG	2.2
1	B	16	ALA	2.2
1	H	313	GLN	2.1
1	C	139	SER	2.1

Continued on next page...

Continued from previous page...

Mol	Chain	Res	Type	RSRZ
1	G	61	ILE	2.1
1	E	286	LYS	2.1
1	G	34	ASN	2.1
1	C	120	LYS	2.1
1	H	81	ASN	2.1
1	F	286	LYS	2.0
1	B	67	GLU	2.0
1	G	67	GLU	2.0
1	G	291	TYR	2.0
1	H	67	GLU	2.0
1	C	127	SER	2.0
1	F	-1	GLN	2.0
1	A	130	ARG	2.0
1	B	175	ARG	2.0

6.2 Non-standard residues in protein, DNA, RNA chains (i)

There are no non-standard protein/DNA/RNA residues in this entry.

6.3 Carbohydrates (i)

There are no monosaccharides in this entry.

6.4 Ligands (i)

There are no ligands in this entry.

6.5 Other polymers (i)

There are no such residues in this entry.