Full wwPDB X-ray Structure Validation Report (i)

Jun 15, 2024 – 05:21 PM EDT

PDB ID	:	1XR4
Title	:	X-ray crystal structure of putative citrate lyase alpha chain/citrate-ACP transferase [Salmonella typhimurium]
Authors	:	Osipiuk, J.; Quartey, P.; Moy, S.; Collart, F.; Joachimiak, A.; Midwest Center for Structural Genomics (MCSG)
Deposited on	:	2004-10-13
Resolution	:	2.37 Å(reported)

This is a Full wwPDB X-ray Structure Validation Report for a publicly released PDB entry.

We welcome your comments at *validation@mail.wwpdb.org*
A user guide is available at
https://www.wwpdb.org/validation/2017/XrayValidationReportHelp
with specific help available everywhere you see the (i) symbol.

The types of validation reports are described at
http://www.wwpdb.org/validation/2017/FAQs#types.

The following versions of software and data (see references (i)) were used in the production of this report:

MolProbity	:	4.02b-467
Mogul	:	2022.3.0, CSD as543be (2022)
Xtriage (Phenix)	:	1.20.1
EDS	:	2.37.1
Percentile statistics	:	20191225.v01 (using entries in the PDB archive December 25th 2019)
Refmac	:	5.8.0158
CCP4	:	7.0.044 (Gargrove)
Ideal geometry (proteins)	:	Engh & Huber (2001)
Ideal geometry (DNA, RNA)	:	Parkinson et al. (1996)
Validation Pipeline (wwPDB-VP)	:	2.37.1

1 Overall quality at a glance (i)

The following experimental techniques were used to determine the structure:
X-RAY DIFFRACTION

The reported resolution of this entry is 2.37 Å.

Percentile scores (ranging between 0-100) for global validation metrics of the entry are shown in the following graphic. The table shows the number of entries on which the scores are based.

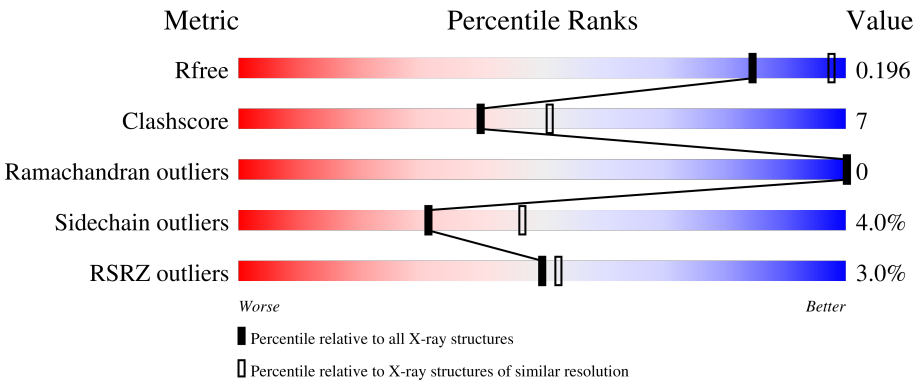

Metric	Whole archive (#Entries)	Similar resolution (#Entries, resolution range(Å))
R_{free}	130704	5509 (2.40-2.36)
Clashscore	141614	6082 (2.40-2.36)
Ramachandran outliers	138981	5973 (2.40-2.36)
Sidechain outliers	138945	5975 (2.40-2.36)
RSRZ outliers	127900	5397 (2.40-2.36)

The table below summarises the geometric issues observed across the polymeric chains and their fit to the electron density. The red, orange, yellow and green segments of the lower bar indicate the fraction of residues that contain outliers for >=3, 2, 1 and 0 types of geometric quality criteria respectively. A grey segment represents the fraction of residues that are not modelled. The numeric value for each fraction is indicated below the corresponding segment, with a dot representing fractions <=5% The upper red bar (where present) indicates the fraction of residues that have poor fit to the electron density. The numeric value is given above the bar.

Mol	Chain	Length	Quality of chain
1	A	509	3% 83% 16% ••
1	B	509	3% 82% 16% ••

2 Entry composition (i)

There are 2 unique types of molecules in this entry. The entry contains 7941 atoms, of which 0 are hydrogens and 0 are deuteriums.

In the tables below, the ZeroOcc column contains the number of atoms modelled with zero occupancy, the AltConf column contains the number of residues with at least one atom in alternate conformation and the Trace column contains the number of residues modelled with at most 2 atoms.

- Molecule 1 is a protein called putative citrate lyase alpha chain/citrate-ACP transferase.

Mol	Chain	Residues	Atoms						ZeroOcc	AltConf	Trace
			Total	C	N	O	S	Se			
1	A	506	3827	2385	688	734	8	12	0	0	0
1	B	506	3827	2385	688	734	8	12	0	0	0

There are 30 discrepancies between the modelled and reference sequences:

Chain	Residue	Modelled	Actual	Comment	Reference
A	-2	SER	-	CLONING ARTIFACT	UNP Q8ZRY1
A	-1	ASN	-	CLONING ARTIFACT	UNP Q8ZRY1
A	0	ALA	-	CLONING ARTIFACT	UNP Q8ZRY1
A	1	MSE	MET	MODIFIED RESIDUE	UNP Q8ZRY1
A	7	MSE	MET	MODIFIED RESIDUE	UNP Q8ZRY1
A	59	MSE	MET	MODIFIED RESIDUE	UNP Q8ZRY1
A	76	MSE	MET	MODIFIED RESIDUE	UNP Q8ZRY1
A	78	MSE	MET	MODIFIED RESIDUE	UNP Q8ZRY1
A	84	MSE	MET	MODIFIED RESIDUE	UNP Q8ZRY1
A	133	MSE	MET	MODIFIED RESIDUE	UNP Q8ZRY1
A	289	MSE	MET	MODIFIED RESIDUE	UNP Q8ZRY1
A	307	MSE	MET	MODIFIED RESIDUE	UNP Q8ZRY1
A	364	MSE	MET	MODIFIED RESIDUE	UNP Q8ZRY1
A	379	MSE	MET	MODIFIED RESIDUE	UNP Q8ZRY1
A	461	MSE	MET	MODIFIED RESIDUE	UNP Q8ZRY1
B	-2	SER	-	CLONING ARTIFACT	UNP Q8ZRY1
B	-1	ASN	-	CLONING ARTIFACT	UNP Q8ZRY1
B	0	ALA	-	CLONING ARTIFACT	UNP Q8ZRY1
B	1	MSE	MET	MODIFIED RESIDUE	UNP Q8ZRY1
B	7	MSE	MET	MODIFIED RESIDUE	UNP Q8ZRY1
B	59	MSE	MET	MODIFIED RESIDUE	UNP Q8ZRY1
B	76	MSE	MET	MODIFIED RESIDUE	UNP Q8ZRY1
B	78	MSE	MET	MODIFIED RESIDUE	UNP Q8ZRY1
B	84	MSE	MET	MODIFIED RESIDUE	UNP Q8ZRY1
B	133	MSE	MET	MODIFIED RESIDUE	UNP Q8ZRY1

Continued on next page...

Continued from previous page...

Chain	Residue	Modelled	Actual	Comment	Reference
B	289	MSE	MET	MODIFIED RESIDUE	UNP Q8ZRY1
B	307	MSE	MET	MODIFIED RESIDUE	UNP Q8ZRY1
B	364	MSE	MET	MODIFIED RESIDUE	UNP Q8ZRY1
B	379	MSE	MET	MODIFIED RESIDUE	UNP Q8ZRY1
B	461	MSE	MET	MODIFIED RESIDUE	UNP Q8ZRY1

- Molecule 2 is water.

Mol	Chain	Residues	Atoms		ZeroOcc	AltConf
			Total	O		
2	A	166	166	166	0	0
			Total	O		
2	B	121	121	121	0	0

3 Residue-property plots (i)

These plots are drawn for all protein, RNA, DNA and oligosaccharide chains in the entry. The first graphic for a chain summarises the proportions of the various outlier classes displayed in the second graphic. The second graphic shows the sequence view annotated by issues in geometry and electron density. Residues are color-coded according to the number of geometric quality criteria for which they contain at least one outlier: green = 0, yellow = 1, orange = 2 and red = 3 or more. A red dot above a residue indicates a poor fit to the electron density (RSRZ > 2). Stretches of 2 or more consecutive residues without any outlier are shown as a green connector. Residues present in the sample, but not in the model, are shown in grey.

• Molecule 1: putative citrate lyase alpha chain/citrate-ACP transferase

Chain A:

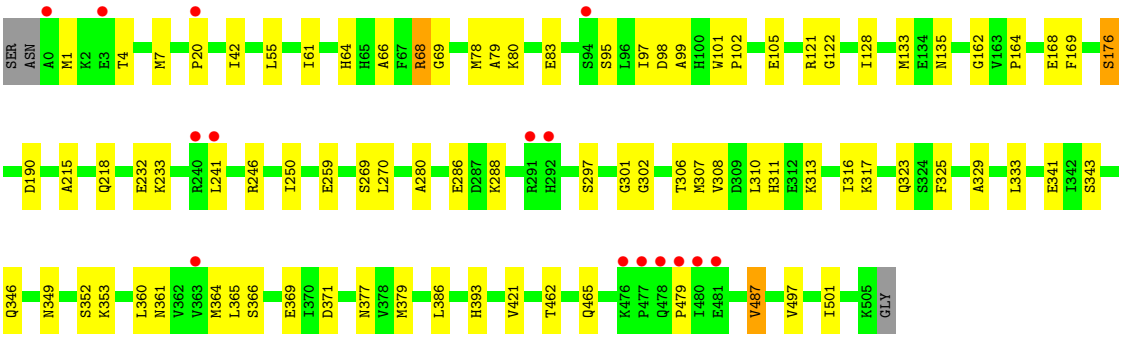

• Molecule 1: putative citrate lyase alpha chain/citrate-ACP transferase

Chain B:

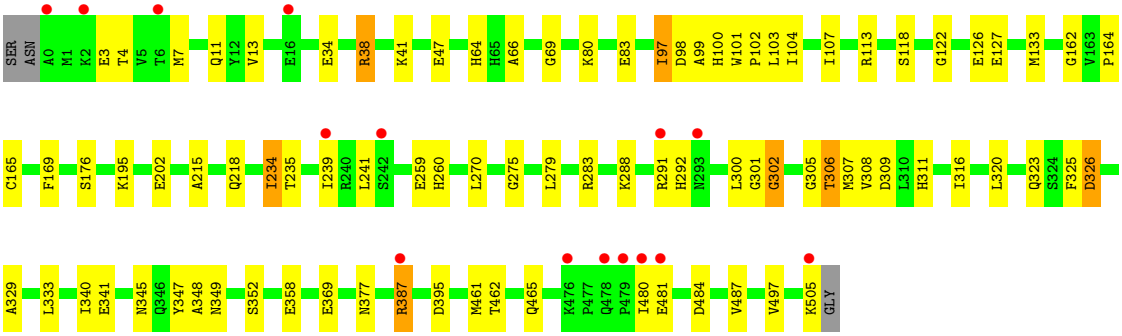

4 Data and refinement statistics (i)

Property	Value	Source
Space group	P 21 21 21	Depositor
Cell constants a, b, c, α, β, γ	58.37Å 116.70Å 189.69Å 90.00° 90.00° 90.00°	Depositor
Resolution (Å)	40.00 – 2.37 38.11 – 2.37	Depositor EDS
% Data completeness (in resolution range)	91.8 (40.00-2.37) 91.8 (38.11-2.37)	Depositor EDS
R_{merge}	0.18	Depositor
R_{sym}	(Not available)	Depositor
$< I/\sigma(I) >$ [1]	1.23 (at 2.37Å)	Xtriage
Refinement program	REFMAC 5.2.0005	Depositor
R, R_{free}	0.193 , 0.235 0.190 , 0.196	Depositor DCC
R_{free} test set	1990 reflections (4.06%)	wwPDB-VP
Wilson B-factor (Å^2)	30.4	Xtriage
Anisotropy	0.980	Xtriage
Bulk solvent k_{sol}(e/Å^3), B_{sol}(Å^2)	0.35 , 42.3	EDS
L-test for twinning[2]	$< \|L\| > = 0.48$, $< L^2 > = 0.31$	Xtriage
Estimated twinning fraction	No twinning to report.	Xtriage
F_o,F_c correlation	0.95	EDS
Total number of atoms	7941	wwPDB-VP
Average B, all atoms (Å^2)	35.0	wwPDB-VP

Xtriage's analysis on translational NCS is as follows: *The largest off-origin peak in the Patterson function is 4.11% of the height of the origin peak. No significant pseudotranslation is detected.*

[1] Intensities estimated from amplitudes.

[2] Theoretical values of $< |L| >$, $< L^2 >$ for acentric reflections are 0.5, 0.333 respectively for untwinned datasets, and 0.375, 0.2 for perfectly twinned datasets.

5 Model quality (i)

5.1 Standard geometry (i)

The Z score for a bond length (or angle) is the number of standard deviations the observed value is removed from the expected value. A bond length (or angle) with $|Z| > 5$ is considered an outlier worth inspection. RMSZ is the root-mean-square of all Z scores of the bond lengths (or angles).

Mol	Chain	Bond lengths		Bond angles	
		RMSZ	$\#\|Z\| >5$	RMSZ	$\#\|Z\| >5$
1	A	0.59	0/3874	0.69	1/5229 (0.0%)
1	B	0.59	0/3874	0.67	1/5229 (0.0%)
All	All	0.59	0/7748	0.68	2/10458 (0.0%)

Chiral center outliers are detected by calculating the chiral volume of a chiral center and verifying if the center is modelled as a planar moiety or with the opposite hand.A planarity outlier is detected by checking planarity of atoms in a peptide group, atoms in a mainchain group or atoms of a sidechain that are expected to be planar.

Mol	Chain	#Chirality outliers	#Planarity outliers
1	A	0	1
1	B	0	1
All	All	0	2

There are no bond length outliers.

All (2) bond angle outliers are listed below:

Mol	Chain	Res	Type	Atoms	Z	Observed(^{o})	Ideal(^{o})
1	A	68	ARG	NE-CZ-NH1	-5.29	117.65	120.30
1	B	302	GLY	N-CA-C	-5.18	100.14	113.10

There are no chirality outliers.

All (2) planarity outliers are listed below:

Mol	Chain	Res	Type	Group
1	A	301	GLY	Peptide
1	B	301	GLY	Peptide

5.2 Too-close contacts (i)

In the following table, the Non-H and H(model) columns list the number of non-hydrogen atoms and hydrogen atoms in the chain respectively. The H(added) column lists the number of hydrogen atoms added and optimized by MolProbity. The Clashes column lists the number of clashes within the asymmetric unit, whereas Symm-Clashes lists symmetry-related clashes.

Mol	Chain	Non-H	H(model)	H(added)	Clashes	Symm-Clashes
1	A	3827	0	3842	57	0
1	B	3827	0	3842	57	0
2	A	166	0	0	6	0
2	B	121	0	0	3	0
All	All	7941	0	7684	112	0

The all-atom clashscore is defined as the number of clashes found per 1000 atoms (including hydrogen atoms). The all-atom clashscore for this structure is 7.

All (112) close contacts within the same asymmetric unit are listed below, sorted by their clash magnitude.

Atom-1	Atom-2	Interatomic distance (Å)	Clash overlap (Å)
1:B:302:GLY:HA2	1:B:323:GLN:O	1.76	0.85
1:A:98:ASP:HB3	1:A:122:GLY:HA3	1.60	0.84
1:A:302:GLY:HA2	1:A:323:GLN:O	1.80	0.81
1:A:462:THR:HG23	1:A:465:GLN:H	1.46	0.79
1:A:307:MSE:HE2	2:A:627:HOH:O	1.84	0.77
1:B:38:ARG:HH11	1:B:38:ARG:HG2	1.51	0.75
1:B:462:THR:H	1:B:465:GLN:HE21	1.34	0.75
1:B:164:PRO:HB2	1:B:176:SER:O	1.89	0.72
1:B:305:GLY:N	1:B:326:ASP:OD1	2.24	0.70
1:B:349:ASN:HB3	1:B:352:SER:HB2	1.77	0.67
1:A:98:ASP:HB3	1:A:122:GLY:CA	2.25	0.67
1:B:345:ASN:ND2	1:B:349:ASN:HD22	1.93	0.66
1:A:133:MSE:HE3	1:A:135:ASN:O	1.96	0.65
1:A:343:SER:H	1:A:346:GLN:NE2	1.95	0.64
1:B:215:ALA:H	1:B:218:GLN:HE21	1.45	0.64
1:B:369:GLU:HG3	1:B:377:ASN:HB3	1.77	0.64
1:A:61:ILE:CD1	1:A:78:MSE:HE1	2.27	0.64
1:A:42:ILE:HD11	1:A:168:GLU:HG3	1.81	0.63
1:B:64:HIS:HE1	1:B:162:GLY:O	1.83	0.61
1:A:246:ARG:O	1:A:250:ILE:HG13	2.01	0.61
1:A:64:HIS:HD2	1:A:66:ALA:H	1.49	0.60
1:A:1:MSE:HB3	1:A:20:PRO:HB3	1.82	0.60
1:A:97:ILE:HD12	1:A:99:ALA:HB3	1.84	0.60

Continued on next page...

Continued from previous page...

Atom-1	Atom-2	Interatomic distance (Å)	Clash overlap (Å)
1:A:241:LEU:HD13	1:A:280:ALA:HA	1.84	0.60
1:B:7:MSE:HG2	1:B:11:GLN:NE2	2.16	0.59
1:B:69:GLY:HA2	1:B:97:ILE:HD13	1.84	0.59
1:B:234:ILE:HG12	2:B:627:HOH:O	2.01	0.59
1:B:461:MSE:HE3	1:B:465:GLN:HB3	1.84	0.59
1:A:297:SER:HA	1:A:317:LYS:HE2	1.84	0.58
1:A:98:ASP:CB	1:A:122:GLY:HA3	2.30	0.58
1:A:479:PRO:HA	2:A:669:HOH:O	2.04	0.57
1:A:135:ASN:ND2	1:B:13:VAL:HB	2.18	0.57
1:B:107:ILE:HG21	1:B:133:MSE:HG2	1.86	0.57
1:B:241:LEU:HD12	1:B:283:ARG:HH11	1.70	0.57
1:B:34:GLU:O	1:B:38:ARG:HD2	2.05	0.56
1:A:366:SER:HB2	2:A:563:HOH:O	2.05	0.56
1:A:369:GLU:HB3	1:A:421:VAL:HG12	1.86	0.56
1:A:270:LEU:HG	1:A:307:MSE:HE1	1.87	0.56
1:A:462:THR:HG21	2:A:633:HOH:O	2.05	0.55
1:B:345:ASN:HD21	1:B:349:ASN:HD22	1.53	0.55
1:A:349:ASN:HB3	1:A:352:SER:HB2	1.87	0.55
1:A:308:VAL:HG21	1:A:329:ALA:HA	1.89	0.55
1:B:164:PRO:HA	1:B:202:GLU:HG2	1.88	0.54
1:A:386:LEU:HD21	1:A:501:ILE:HD13	1.90	0.54
1:A:164:PRO:HB2	1:A:176:SER:O	2.07	0.54
1:A:64:HIS:CD2	1:A:66:ALA:H	2.26	0.54
1:B:270:LEU:HG	1:B:307:MSE:HE1	1.91	0.53
1:B:311:HIS:HD2	1:B:316:ILE:O	1.93	0.51
1:B:288:LYS:O	1:B:292:HIS:HD2	1.94	0.51
1:A:215:ALA:H	1:A:218:GLN:HE21	1.59	0.51
1:B:38:ARG:HG2	1:B:38:ARG:NH1	2.24	0.51
1:B:302:GLY:HA3	1:B:325:PHE:CE2	2.46	0.50
1:A:61:ILE:HD11	1:A:78:MSE:HE1	1.93	0.50
1:A:302:GLY:HA3	1:A:325:PHE:CE2	2.47	0.50
1:B:307:MSE:HE2	2:B:568:HOH:O	2.10	0.50
1:B:308:VAL:HG21	1:B:329:ALA:HA	1.94	0.50
1:A:302:GLY:CA	1:A:323:GLN:O	2.57	0.50
1:A:64:HIS:HE1	1:A:162:GLY:O	1.94	0.50
1:A:371:ASP:HB3	1:A:421:VAL:HG13	1.95	0.49
1:B:279:LEU:HD11	1:B:306:THR:CG2	2.42	0.49
1:A:79:ALA:O	1:A:83:GLU:HG3	2.12	0.49
1:B:311:HIS:HE1	2:B:515:HOH:O	1.94	0.49
1:B:38:ARG:HH11	1:B:38:ARG:CG	2.23	0.48
1:B:279:LEU:HD11	1:B:306:THR:HG21	1.93	0.48

Continued on next page...

Continued from previous page...

Atom-1	Atom-2	Interatomic distance (Å)	Clash overlap (Å)
1:B:64:HIS:HD2	1:B:66:ALA:H	1.61	0.48
1:A:61:ILE:HD12	1:A:78:MSE:HE1	1.96	0.48
1:A:379:MSE:HE2	1:A:386:LEU:HD22	1.94	0.48
1:A:462:THR:HG22	1:A:465:GLN:CG	2.44	0.47
1:B:64:HIS:CD2	1:B:66:ALA:H	2.32	0.47
1:A:232:GLU:HG2	2:A:634:HOH:O	2.13	0.47
1:A:105:GLU:HG2	2:A:541:HOH:O	2.14	0.47
1:A:462:THR:HG22	1:A:465:GLN:HG3	1.96	0.47
1:B:104:ILE:HD13	1:B:127:GLU:HG3	1.96	0.46
1:A:343:SER:H	1:A:346:GLN:HE21	1.64	0.46
1:A:462:THR:CG2	1:A:465:GLN:HG3	2.46	0.46
1:B:101:TRP:N	1:B:102:PRO:CD	2.80	0.45
1:A:310:LEU:HB2	1:A:316:ILE:HD12	1.98	0.45
1:B:98:ASP:HB3	1:B:122:GLY:HA3	1.97	0.45
1:B:100:HIS:O	1:B:103:LEU:HB2	2.17	0.44
1:A:101:TRP:N	1:A:102:PRO:CD	2.80	0.44
1:B:165:CYS:SG	1:B:176:SER:HB2	2.58	0.44
1:B:98:ASP:CB	1:B:122:GLY:HA3	2.48	0.44
1:B:275:GLY:H	1:B:279:LEU:HB2	1.82	0.44
1:B:126:GLU:CG	1:B:387:ARG:HH22	2.31	0.44
1:A:353:LYS:O	1:B:41:LYS:NZ	2.40	0.43
1:A:369:GLU:HB2	1:A:377:ASN:HB3	2.01	0.43
1:A:333:LEU:HD11	1:A:341:GLU:HB2	1.99	0.43
1:B:3:GLU:CD	1:B:3:GLU:H	2.22	0.43
1:B:462:THR:H	1:B:465:GLN:NE2	2.10	0.43
1:B:300:LEU:HD11	1:B:347:TYR:HD1	1.82	0.43
1:A:259:GLU:OE1	1:A:288:LYS:HE2	2.19	0.43
1:B:47:GLU:HG3	1:B:80:LYS:HE3	2.00	0.42
1:B:275:GLY:N	1:B:279:LEU:HB2	2.35	0.42
1:A:365:LEU:HB3	1:A:393:HIS:NE2	2.34	0.42
1:B:38:ARG:NH1	1:B:38:ARG:CG	2.82	0.42
1:B:234:ILE:HG22	1:B:235:THR:HG23	2.01	0.42
1:A:286:GLU:OE2	1:A:313:LYS:HE3	2.20	0.42
1:B:348:ALA:HB1	1:B:395:ASP:HB3	2.00	0.42
1:B:320:LEU:HD23	1:B:340:ILE:HB	2.01	0.42
1:A:128:ILE:HG22	1:A:487:VAL:HG13	2.01	0.42
1:A:68:ARG:HB3	1:A:69:GLY:H	1.68	0.41
1:B:481:GLU:O	1:B:505:LYS:HB2	2.21	0.41
1:A:364:MSE:HE3	1:A:364:MSE:HB3	1.89	0.41
1:A:462:THR:HG22	1:A:465:GLN:OE1	2.20	0.41
1:A:269:SER:O	1:A:361:ASN:HB2	2.19	0.41

Continued on next page...

Continued from previous page...

Atom-1	Atom-2	Interatomic distance (Å)	Clash overlap (Å)
1:B:302:GLY:CA	1:B:323:GLN:O	2.57	0.41
1:B:333:LEU:HD11	1:B:341:GLU:HB2	2.02	0.41
1:A:215:ALA:H	1:A:218:GLN:NE2	2.18	0.41
1:A:311:HIS:HD2	1:A:316:ILE:O	2.04	0.40
1:B:195:LYS:HA	1:B:195:LYS:HD3	1.93	0.40
1:B:259:GLU:OE2	1:B:260:HIS:CE1	2.75	0.40
1:B:97:ILE:HD12	1:B:99:ALA:HB3	2.03	0.40

There are no symmetry-related clashes.

5.3 Torsion angles (i)

5.3.1 Protein backbone (i)

In the following table, the Percentiles column shows the percent Ramachandran outliers of the chain as a percentile score with respect to all X-ray entries followed by that with respect to entries of similar resolution.

The Analysed column shows the number of residues for which the backbone conformation was analysed, and the total number of residues.

Mol	Chain	Analysed	Favoured	Allowed	Outliers	Percentiles	
1	A	504/509 (99%)	488 (97%)	16 (3%)	0	100	100
1	B	504/509 (99%)	493 (98%)	11 (2%)	0	100	100
All	All	1008/1018 (99%)	981 (97%)	27 (3%)	0	100	100

There are no Ramachandran outliers to report.

5.3.2 Protein sidechains (i)

In the following table, the Percentiles column shows the percent sidechain outliers of the chain as a percentile score with respect to all X-ray entries followed by that with respect to entries of similar resolution.

The Analysed column shows the number of residues for which the sidechain conformation was analysed, and the total number of residues.

Mol	Chain	Analysed	Rotameric	Outliers	Percentiles	
1	A	412/402 (102%)	398 (97%)	14 (3%)	37	53

Continued on next page...

Continued from previous page...

Mol	Chain	Analysed	Rotameric	Outliers	Percentiles	
1	B	412/402 (102%)	393 (95%)	19 (5%)	27	40
All	All	824/804 (102%)	791 (96%)	33 (4%)	31	47

All (33) residues with a non-rotameric sidechain are listed below:

Mol	Chain	Res	Type
1	A	4	THR
1	A	7	MSE
1	A	55	LEU
1	A	80	LYS
1	A	95	SER
1	A	121	ARG
1	A	169	PHE
1	A	176	SER
1	A	190	ASP
1	A	233	LYS
1	A	306	THR
1	A	360	LEU
1	A	487	VAL
1	A	497	VAL
1	B	4	THR
1	B	38	ARG
1	B	83	GLU
1	B	97	ILE
1	B	113	ARG
1	B	118	SER
1	B	169	PHE
1	B	234	ILE
1	B	239	ILE
1	B	291	ARG
1	B	306	THR
1	B	309	ASP
1	B	326	ASP
1	B	358	GLU
1	B	387	ARG
1	B	480	ILE
1	B	484	ASP
1	B	487	VAL
1	B	497	VAL

Sometimes sidechains can be flipped to improve hydrogen bonding and reduce clashes. All (21) such sidechains are listed below:

Mol	Chain	Res	Type
1	A	64	HIS
1	A	135	ASN
1	A	218	GLN
1	A	256	ASN
1	A	271	GLN
1	A	311	HIS
1	A	336	ASN
1	A	346	GLN
1	A	438	HIS
1	B	11	GLN
1	B	27	ASN
1	B	64	HIS
1	B	114	GLN
1	B	135	ASN
1	B	218	GLN
1	B	260	HIS
1	B	292	HIS
1	B	311	HIS
1	B	336	ASN
1	B	345	ASN
1	B	465	GLN

5.3.3 RNA (i)

There are no RNA molecules in this entry.

5.4 Non-standard residues in protein, DNA, RNA chains (i)

There are no non-standard protein/DNA/RNA residues in this entry.

5.5 Carbohydrates (i)

There are no monosaccharides in this entry.

5.6 Ligand geometry (i)

There are no ligands in this entry.

5.7 Other polymers (i)

There are no such residues in this entry.

5.8 Polymer linkage issues (i)

There are no chain breaks in this entry.

6 Fit of model and data (i)

6.1 Protein, DNA and RNA chains (i)

In the following table, the column labelled '#RSRZ> 2' contains the number (and percentage) of RSRZ outliers, followed by percent RSRZ outliers for the chain as percentile scores relative to all X-ray entries and entries of similar resolution. The OWAB column contains the minimum, median, 95th percentile and maximum values of the occupancy-weighted average B-factor per residue. The column labelled 'Q< 0.9' lists the number of (and percentage) of residues with an average occupancy less than 0.9.

Mol	Chain	Analysed	<RSRZ>	#RSRZ>2			OWAB(Å^2)	Q<0.9
1	A	494/509 (97%)	-0.05	15 (3%)	50	53	23, 32, 51, 81	0
1	B	494/509 (97%)	0.01	15 (3%)	50	53	25, 35, 51, 76	0
All	All	988/1018 (97%)	-0.02	30 (3%)	50	53	23, 34, 51, 81	0

All (30) RSRZ outliers are listed below:

Mol	Chain	Res	Type	RSRZ
1	B	293	ASN	3.7
1	B	478	GLN	3.6
1	B	239	ILE	3.6
1	B	480	ILE	3.5
1	A	291	ARG	3.5
1	B	2	LYS	3.3
1	B	479	PRO	3.3
1	A	478	GLN	3.1
1	A	240	ARG	3.0
1	A	477	PRO	3.0
1	B	481	GLU	2.9
1	A	479	PRO	2.9
1	A	3	GLU	2.7
1	B	505	LYS	2.7
1	A	0	ALA	2.7
1	B	476	LYS	2.6
1	B	242	SER	2.5
1	A	481	GLU	2.4
1	B	0	ALA	2.4
1	A	241	LEU	2.3
1	B	291	ARG	2.3
1	A	480	ILE	2.3
1	B	6	THR	2.2
1	A	20	PRO	2.2

Continued on next page...

Continued from previous page...

Mol	Chain	Res	Type	RSRZ
1	B	16	GLU	2.2
1	A	292	HIS	2.2
1	A	363	VAL	2.1
1	A	476	LYS	2.1
1	B	387	ARG	2.1
1	A	94	SER	2.0

6.2 Non-standard residues in protein, DNA, RNA chains (i)

There are no non-standard protein/DNA/RNA residues in this entry.

6.3 Carbohydrates (i)

There are no monosaccharides in this entry.

6.4 Ligands (i)

There are no ligands in this entry.

6.5 Other polymers (i)

There are no such residues in this entry.