Full wwPDB X-ray Structure Validation Report (i)

Oct 16, 2023 – 02:35 AM EDT

PDB ID	:	1WKY
Title	:	Crystal structure of alkaline mannanase from Bacillus sp. strain JAMB-602: catalytic domain and its Carbohydrate Binding Module
Authors	:	Akita, M.; Takeda, N.; Hirasawa, K.; Sakai, H.; Kawamoto, M.; Yamamoto, M.; Grant, W.D.; Hatada, Y.; Ito, S.; Horikoshi, K.
Deposited on	:	2004-06-15
Resolution	:	1.65 Å(reported)

This is a Full wwPDB X-ray Structure Validation Report for a publicly released PDB entry.

We welcome your comments at *validation@mail.wwpdb.org*
A user guide is available at
https://www.wwpdb.org/validation/2017/XrayValidationReportHelp
with specific help available everywhere you see the (i) symbol.

The types of validation reports are described at
http://www.wwpdb.org/validation/2017/FAQs#types.

The following versions of software and data (see references (1)) were used in the production of this report:

MolProbity	:	4.02b-467
Xtriage (Phenix)	:	1.13
EDS	:	2.36
Percentile statistics	:	20191225.v01 (using entries in the PDB archive December 25th 2019)
Refmac	:	5.8.0158
CCP4	:	7.0.044 (Gargrove)
Ideal geometry (proteins)	:	Engh & Huber (2001)
Ideal geometry (DNA, RNA)	:	Parkinson et al. (1996)
Validation Pipeline (wwPDB-VP)	:	2.36

1 Overall quality at a glance (i)

The following experimental techniques were used to determine the structure:
X-RAY DIFFRACTION

The reported resolution of this entry is 1.65 Å.

Percentile scores (ranging between 0-100) for global validation metrics of the entry are shown in the following graphic. The table shows the number of entries on which the scores are based.

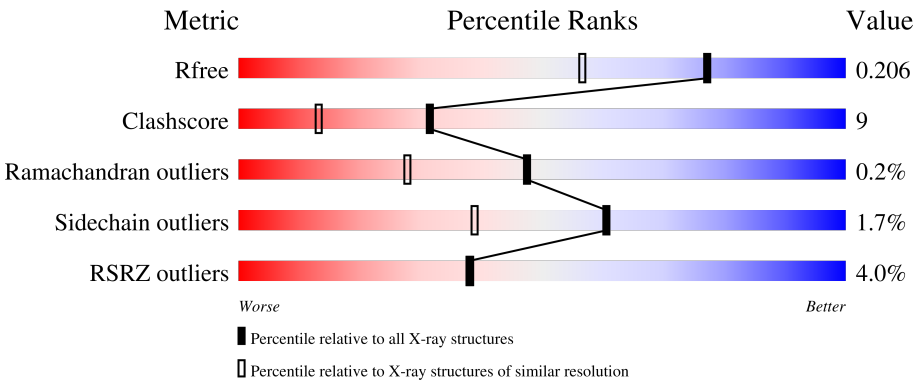

Metric	Whole archive (#Entries)	Similar resolution (#Entries, resolution range(Å))
R_{free}	130704	1827 (1.66-1.66)
Clashscore	141614	1931 (1.66-1.66)
Ramachandran outliers	138981	1891 (1.66-1.66)
Sidechain outliers	138945	1891 (1.66-1.66)
RSRZ outliers	127900	1791 (1.66-1.66)

The table below summarises the geometric issues observed across the polymeric chains and their fit to the electron density. The red, orange, yellow and green segments of the lower bar indicate the fraction of residues that contain outliers for >=3, 2, 1 and 0 types of geometric quality criteria respectively. A grey segment represents the fraction of residues that are not modelled. The numeric value for each fraction is indicated below the corresponding segment, with a dot representing fractions <=5% The upper red bar (where present) indicates the fraction of residues that have poor fit to the electron density. The numeric value is given above the bar.

Mol	Chain	Length	Quality of chain
1	A	464	4% 81% 14% • •

2 Entry composition (i)

There are 5 unique types of molecules in this entry. The entry contains 3883 atoms, of which 0 are hydrogens and 0 are deuteriums.

In the tables below, the ZeroOcc column contains the number of atoms modelled with zero occupancy, the AltConf column contains the number of residues with at least one atom in alternate conformation and the Trace column contains the number of residues modelled with at most 2 atoms.

- Molecule 1 is a protein called endo-beta-1,4-Mannanase.

Mol	Chain	Residues	Atoms					ZeroOcc	AltConf	Trace
			Total	C	N	O	S			
1	A	446	3502	2188	617	689	8	0	5	0

- Molecule 2 is CHLORIDE ION (three-letter code: CL) (formula: Cl).

Mol	Chain	Residues	Atoms		ZeroOcc	AltConf
			Total	Cl		
2	A	2	2	2	0	0

- Molecule 3 is CALCIUM ION (three-letter code: CA) (formula: Ca).

Mol	Chain	Residues	Atoms		ZeroOcc	AltConf
			Total	Ca		
3	A	1	1	1	0	0

- Molecule 4 is SODIUM ION (three-letter code: NA) (formula: Na).

Mol	Chain	Residues	Atoms		ZeroOcc	AltConf
			Total	Na		
4	A	2	2	2	0	0

- Molecule 5 is water.

Mol	Chain	Residues	Atoms		ZeroOcc	AltConf
			Total	O		
5	A	376	376	376	0	0

3 Residue-property plots (i)

These plots are drawn for all protein, RNA, DNA and oligosaccharide chains in the entry. The first graphic for a chain summarises the proportions of the various outlier classes displayed in the second graphic. The second graphic shows the sequence view annotated by issues in geometry and electron density. Residues are color-coded according to the number of geometric quality criteria for which they contain at least one outlier: green = 0, yellow = 1, orange = 2 and red = 3 or more. A red dot above a residue indicates a poor fit to the electron density (RSRZ > 2). Stretches of 2 or more consecutive residues without any outlier are shown as a green connector. Residues present in the sample, but not in the model, are shown in grey.

- Molecule 1: endo-beta-1,4-Mannanase

Chain A:

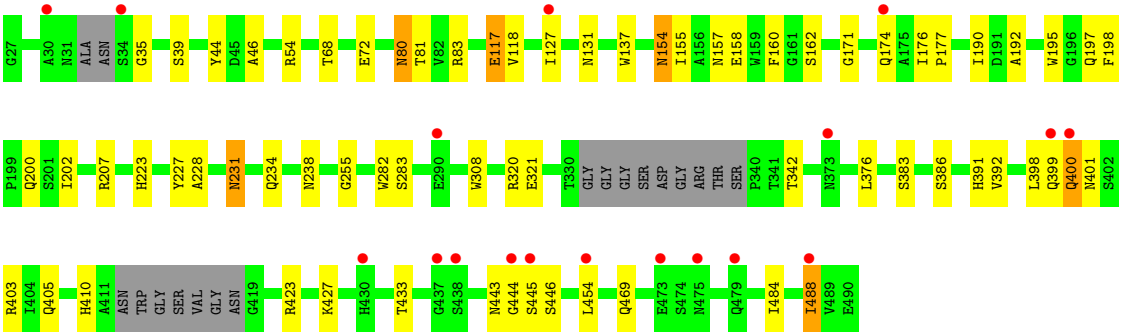

4 Data and refinement statistics (i)

Property	Value	Source
Space group	P 21 21 21	Depositor
Cell constants a, b, c, α, β, γ	70.68Å 79.48Å 80.42Å 90.00° 90.00° 90.00°	Depositor
Resolution (Å)	44.15 – 1.65 44.15 – 1.65	Depositor EDS
% Data completeness (in resolution range)	84.1 (44.15-1.65) 97.5 (44.15-1.65)	Depositor EDS
R_{merge}	0.07	Depositor
R_{sym}	(Not available)	Depositor
$< I/\sigma(I) >$ [1]	2.69 (at 1.65Å)	Xtriage
Refinement program	CNS 1.1	Depositor
R, R_{free}	0.178 , 0.200 0.186 , 0.206	Depositor DCC
R_{free} test set	2793 reflections (5.06%)	wwPDB-VP
Wilson B-factor (Å^2)	15.8	Xtriage
Anisotropy	0.144	Xtriage
Bulk solvent k_{sol}(e/Å^3), B_{sol}(Å^2)	0.37 , 44.8	EDS
L-test for twinning[2]	$< \|L\| > = 0.49$, $< L^2 > = 0.33$	Xtriage
Estimated twinning fraction	0.014 for -h,l,k	Xtriage
F_o,F_c correlation	0.96	EDS
Total number of atoms	3883	wwPDB-VP
Average B, all atoms (Å^2)	21.0	wwPDB-VP

Xtriage's analysis on translational NCS is as follows: *The largest off-origin peak in the Patterson function is 4.91% of the height of the origin peak. No significant pseudotranslation is detected.*

[1]Intensities estimated from amplitudes.

[2]Theoretical values of $< |L| >$, $< L^2 >$ for acentric reflections are 0.5, 0.333 respectively for untwinned datasets, and 0.375, 0.2 for perfectly twinned datasets.

5 Model quality (i)

5.1 Standard geometry (i)

Bond lengths and bond angles in the following residue types are not validated in this section: NA, CA, CL

The Z score for a bond length (or angle) is the number of standard deviations the observed value is removed from the expected value. A bond length (or angle) with $|Z| > 5$ is considered an outlier worth inspection. RMSZ is the root-mean-square of all Z scores of the bond lengths (or angles).

Mol	Chain	Bond lengths		Bond angles	
		RMSZ	$\#\|Z\| >5$	RMSZ	$\#\|Z\| >5$
1	A	0.30	0/3583	0.60	0/4876

There are no bond length outliers.

There are no bond angle outliers.

There are no chirality outliers.

There are no planarity outliers.

5.2 Too-close contacts (i)

In the following table, the Non-H and H(model) columns list the number of non-hydrogen atoms and hydrogen atoms in the chain respectively. The H(added) column lists the number of hydrogen atoms added and optimized by MolProbity. The Clashes column lists the number of clashes within the asymmetric unit, whereas Symm-Clashes lists symmetry-related clashes.

Mol	Chain	Non-H	H(model)	H(added)	Clashes	Symm-Clashes
1	A	3502	0	3276	61	0
2	A	2	0	0	0	0
3	A	1	0	0	0	0
4	A	2	0	0	0	0
5	A	376	0	0	2	0
All	All	3883	0	3276	61	0

The all-atom clashscore is defined as the number of clashes found per 1000 atoms (including hydrogen atoms). The all-atom clashscore for this structure is 9.

All (61) close contacts within the same asymmetric unit are listed below, sorted by their clash magnitude.

Atom-1	Atom-2	Interatomic distance (Å)	Clash overlap (Å)
1:A:342:THR:HA	1:A:488:ILE:HG22	1.48	0.93
1:A:83:ARG:HH22	1:A:157:ASN:HD22	1.12	0.90
1:A:423:ARG:HH21	1:A:469:GLN:HE22	1.22	0.88
1:A:403:ARG:HH21	1:A:405:GLN:NE2	1.80	0.79
1:A:54:ARG:H	1:A:80:ASN:HD21	1.33	0.74
1:A:197:GLN:HE22	1:A:227:TYR:H	1.40	0.70
1:A:405:GLN:HG3	1:A:488:ILE:HD11	1.74	0.69
1:A:423:ARG:HE	1:A:469:GLN:NE2	1.90	0.69
1:A:443:ASN:ND2	1:A:446:SER:H	1.93	0.66
1:A:83:ARG:HH22	1:A:157:ASN:ND2	1.92	0.64
1:A:342:THR:CA	1:A:488:ILE:HG22	2.27	0.63
1:A:423:ARG:HE	1:A:469:GLN:HE21	1.44	0.62
1:A:410:HIS:O	1:A:444:GLY:HA2	1.99	0.61
1:A:403:ARG:HH21	1:A:405:GLN:HE21	1.47	0.60
1:A:231:ASN:ND2	1:A:234:GLN:H	1.98	0.60
1:A:383:SER:OG	1:A:386:SER:HB3	2.01	0.60
1:A:321:GLU:OE1	1:A:391:HIS:HE1	1.85	0.60
1:A:443:ASN:HD21	1:A:446:SER:H	1.49	0.59
1:A:80:ASN:C	1:A:80:ASN:HD22	2.03	0.59
1:A:80:ASN:HD22	1:A:81:THR:N	2.02	0.58
1:A:207:ARG:HD3	5:A:917:HOH:O	2.03	0.58
1:A:127:ILE:HG12	1:A:131:ASN:ND2	2.20	0.57
1:A:54:ARG:H	1:A:80:ASN:ND2	2.01	0.57
1:A:488:ILE:H	1:A:488:ILE:HD13	1.70	0.57
1:A:423:ARG:NH2	1:A:469:GLN:HE22	1.99	0.56
1:A:488:ILE:HD13	1:A:488:ILE:N	2.21	0.55
1:A:198:PHE:CE2	1:A:200:GLN:HB3	2.43	0.53
1:A:443:ASN:HD22	1:A:445:SER:H	1.55	0.53
1:A:255:GLY:HA2	1:A:308:TRP:CZ2	2.43	0.53
1:A:405:GLN:CG	1:A:488:ILE:HD11	2.38	0.52
1:A:282:TRP:CD2	1:A:283:SER:HB3	2.46	0.50
1:A:376:LEU:HB3	1:A:484[A]:ILE:CG2	2.41	0.50
1:A:158:GLU:HB3	1:A:195:TRP:HA	1.94	0.49
1:A:197:GLN:HE21	1:A:228:ALA:H	1.60	0.49
1:A:399:GLN:O	1:A:400:GLN:CB	2.60	0.49
1:A:176:ILE:HB	1:A:177:PRO:HD3	1.95	0.49
1:A:282:TRP:CG	1:A:283:SER:HB3	2.48	0.49
1:A:118:VAL:HG23	1:A:137:TRP:CZ2	2.47	0.49
1:A:157:ASN:ND2	1:A:223:HIS:HE1	2.11	0.48
1:A:171:GLY:O	1:A:174:GLN:HG3	2.12	0.48
1:A:197:GLN:NE2	1:A:227:TYR:H	2.10	0.47
1:A:320:ARG:HD2	5:A:966:HOH:O	2.14	0.47

Continued on next page...

Continued from previous page...

Atom-1	Atom-2	Interatomic distance (Å)	Clash overlap (Å)
1:A:68:THR:O	1:A:72:GLU:HG3	2.18	0.44
1:A:80:ASN:C	1:A:80:ASN:ND2	2.71	0.44
1:A:197:GLN:NE2	1:A:228:ALA:H	2.16	0.44
1:A:403:ARG:NH2	1:A:405:GLN:HE21	2.14	0.44
1:A:39:SER:HB3	1:A:44:TYR:HE1	1.83	0.44
1:A:192:ALA:HB2	1:A:202:ILE:HD11	2.00	0.43
1:A:403:ARG:HH21	1:A:405:GLN:HE22	1.64	0.43
1:A:117:GLU:HB3	1:A:154:ASN:HB3	2.00	0.42
1:A:392:VAL:HG13	1:A:392:VAL:O	2.20	0.42
1:A:207:ARG:HA	1:A:207:ARG:HD2	1.92	0.42
1:A:160:PHE:CE1	1:A:162:SER:HB2	2.55	0.41
1:A:39:SER:HB3	1:A:44:TYR:CE1	2.55	0.41
1:A:405:GLN:HG3	1:A:488:ILE:CD1	2.49	0.41
1:A:398:LEU:O	1:A:401:ASN:HB2	2.20	0.41
1:A:376:LEU:HB3	1:A:484[A]:ILE:HG22	2.02	0.41
1:A:155:ILE:HD12	1:A:190:ILE:CD1	2.50	0.40
1:A:35:GLY:HA2	1:A:46:ALA:HB2	2.03	0.40
1:A:238:ASN:HD22	1:A:238:ASN:HA	1.68	0.40
1:A:427:LYS:HA	1:A:433:THR:O	2.21	0.40

There are no symmetry-related clashes.

5.3 Torsion angles (i)

5.3.1 Protein backbone (i)

In the following table, the Percentiles column shows the percent Ramachandran outliers of the chain as a percentile score with respect to all X-ray entries followed by that with respect to entries of similar resolution.

The Analysed column shows the number of residues for which the backbone conformation was analysed, and the total number of residues.

Mol	Chain	Analysed	Favoured	Allowed	Outliers	Percentiles
1	A	443/464 (96%)	428 (97%)	14 (3%)	1 (0%)	47 28

All (1) Ramachandran outliers are listed below:

Mol	Chain	Res	Type
1	A	400	GLN

5.3.2 Protein sidechains (i)

In the following table, the Percentiles column shows the percent sidechain outliers of the chain as a percentile score with respect to all X-ray entries followed by that with respect to entries of similar resolution.

The Analysed column shows the number of residues for which the sidechain conformation was analysed, and the total number of residues.

Mol	Chain	Analysed	Rotameric	Outliers	Percentiles
1	A	367/381 (96%)	361 (98%)	6 (2%)	62 41

All (6) residues with a non-rotameric sidechain are listed below:

Mol	Chain	Res	Type
1	A	80	ASN
1	A	117	GLU
1	A	154	ASN
1	A	231	ASN
1	A	454	LEU
1	A	488	ILE

Sometimes sidechains can be flipped to improve hydrogen bonding and reduce clashes. All (20) such sidechains are listed below:

Mol	Chain	Res	Type
1	A	47	ASN
1	A	80	ASN
1	A	131	ASN
1	A	157	ASN
1	A	174	GLN
1	A	181	ASN
1	A	197	GLN
1	A	231	ASN
1	A	234	GLN
1	A	238	ASN
1	A	303	ASN
1	A	304	ASN
1	A	391	HIS
1	A	399	GLN
1	A	401	ASN
1	A	405	GLN
1	A	443	ASN
1	A	458	GLN
1	A	469	GLN

Continued on next page...

Continued from previous page...

Mol	Chain	Res	Type
1	A	479	GLN

5.3.3 RNA (i)

There are no RNA molecules in this entry.

5.4 Non-standard residues in protein, DNA, RNA chains (i)

There are no non-standard protein/DNA/RNA residues in this entry.

5.5 Carbohydrates (i)

There are no monosaccharides in this entry.

5.6 Ligand geometry (i)

Of 5 ligands modelled in this entry, 5 are monoatomic - leaving 0 for Mogul analysis.

There are no bond length outliers.

There are no bond angle outliers.

There are no chirality outliers.

There are no torsion outliers.

There are no ring outliers.

No monomer is involved in short contacts.

5.7 Other polymers (i)

There are no such residues in this entry.

5.8 Polymer linkage issues (i)

There are no chain breaks in this entry.

6 Fit of model and data (i)

6.1 Protein, DNA and RNA chains (i)

In the following table, the column labelled '#RSRZ> 2' contains the number (and percentage) of RSRZ outliers, followed by percent RSRZ outliers for the chain as percentile scores relative to all X-ray entries and entries of similar resolution. The OWAB column contains the minimum, median, 95th percentile and maximum values of the occupancy-weighted average B-factor per residue. The column labelled 'Q< 0.9' lists the number of (and percentage) of residues with an average occupancy less than 0.9.

Mol	Chain	Analysed	<RSRZ>	#RSRZ>2	OWAB(Å^2)	Q<0.9
1	A	446/464 (96%)	0.08	18 (4%) 38 38	12, 19, 37, 45	0

All (18) RSRZ outliers are listed below:

Mol	Chain	Res	Type	RSRZ
1	A	400	GLN	6.0
1	A	438	SER	3.8
1	A	445	SER	3.7
1	A	430	HIS	3.5
1	A	30	ALA	3.2
1	A	475	ASN	3.0
1	A	479	GLN	2.9
1	A	34	SER	2.7
1	A	437	GLY	2.7
1	A	373	ASN	2.4
1	A	444	GLY	2.4
1	A	127	ILE	2.3
1	A	454	LEU	2.3
1	A	488	ILE	2.3
1	A	473	GLU	2.3
1	A	290	GLU	2.2
1	A	174	GLN	2.2
1	A	399	GLN	2.1

6.2 Non-standard residues in protein, DNA, RNA chains (i)

There are no non-standard protein/DNA/RNA residues in this entry.

6.3 Carbohydrates (i)

There are no monosaccharides in this entry.

6.4 Ligands (i)

In the following table, the Atoms column lists the number of modelled atoms in the group and the number defined in the chemical component dictionary. The B-factors column lists the minimum, median, 95th percentile and maximum values of B factors of atoms in the group. The column labelled 'Q< 0.9' lists the number of atoms with occupancy less than 0.9.

Mol	Type	Chain	Res	Atoms	RSCC	RSR	B-factors(Å^2)	Q<0.9
4	NA	A	505	1/1	0.98	0.08	20,20,20,20	0
3	CA	A	503	1/1	0.99	0.06	21,21,21,21	0
4	NA	A	504	1/1	0.99	0.04	15,15,15,15	0
2	CL	A	502	1/1	0.99	0.06	20,20,20,20	0
2	CL	A	501	1/1	1.00	0.05	17,17,17,17	0

6.5 Other polymers (i)

There are no such residues in this entry.