Full wwPDB X-ray Structure Validation Report (i)

Sep 24, 2023 – 12:14 AM EDT

PDB ID	:	5TR2
Title	:	Crystal structure of the D263G missense variant of human PGM1
Authors	:	Beamer, L.J.; Stiers, K.M.
Deposited on	:	2016-10-25
Resolution	:	2.50 Å(reported)

This is a Full wwPDB X-ray Structure Validation Report for a publicly released PDB entry.

We welcome your comments at *validation@mail.wwpdb.org*
A user guide is available at
https://www.wwpdb.org/validation/2017/XrayValidationReportHelp
with specific help available everywhere you see the (i) symbol.

The types of validation reports are described at
http://www.wwpdb.org/validation/2017/FAQs#types.

The following versions of software and data (see references (i)) were used in the production of this report:

MolProbity	:	4.02b-467
Mogul	:	1.8.5 (274361), CSD as541be (2020)
Xtriage (Phenix)	:	1.13
EDS	:	2.35.1
Percentile statistics	:	20191225.v01 (using entries in the PDB archive December 25th 2019)
Refmac	:	5.8.0158
CCP4	:	7.0.044 (Gargrove)
Ideal geometry (proteins)	:	Engh & Huber (2001)
Ideal geometry (DNA, RNA)	:	Parkinson et al. (1996)
Validation Pipeline (wwPDB-VP)	:	2.35.1

1 Overall quality at a glance (i)

The following experimental techniques were used to determine the structure:
X-RAY DIFFRACTION

The reported resolution of this entry is 2.50 Å.

Percentile scores (ranging between 0-100) for global validation metrics of the entry are shown in the following graphic. The table shows the number of entries on which the scores are based.

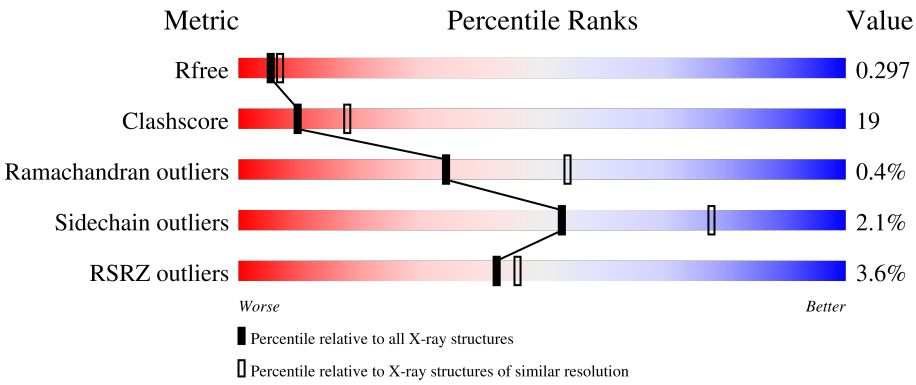

Metric	Whole archive (#Entries)	Similar resolution (#Entries, resolution range(Å))
R_{free}	130704	4661 (2.50-2.50)
Clashscore	141614	5346 (2.50-2.50)
Ramachandran outliers	138981	5231 (2.50-2.50)
Sidechain outliers	138945	5233 (2.50-2.50)
RSRZ outliers	127900	4559 (2.50-2.50)

The table below summarises the geometric issues observed across the polymeric chains and their fit to the electron density. The red, orange, yellow and green segments of the lower bar indicate the fraction of residues that contain outliers for >=3, 2, 1 and 0 types of geometric quality criteria respectively. A grey segment represents the fraction of residues that are not modelled. The numeric value for each fraction is indicated below the corresponding segment, with a dot representing fractions <=5% The upper red bar (where present) indicates the fraction of residues that have poor fit to the electron density. The numeric value is given above the bar.

Mol	Chain	Length	Quality of chain
1	A	585	% 67% 28% • •
1	B	585	6% 69% 24% • 6%

The following table lists non-polymeric compounds, carbohydrate monomers and non-standard residues in protein, DNA, RNA chains that are outliers for geometric or electron-density-fit criteria:

Mol	Type	Chain	Res	Chirality	Geometry	Clashes	Electron density
2	SO4	A	602	-	-	X	-
2	SO4	B	601	-	-	X	-

2 Entry composition (i)

There are 5 unique types of molecules in this entry. The entry contains 8233 atoms, of which 0 are hydrogens and 0 are deuteriums.

In the tables below, the ZeroOcc column contains the number of atoms modelled with zero occupancy, the AltConf column contains the number of residues with at least one atom in alternate conformation and the Trace column contains the number of residues modelled with at most 2 atoms.

- Molecule 1 is a protein called Phosphoglucomutase-1.

Mol	Chain	Residues	Atoms						ZeroOcc	AltConf	Trace
			Total	C	N	O	P	S			
1	A	561	4188	2659	713	798	1	17	0	8	0
1	B	552	3813	2393	670	735	1	14	0	7	0

There are 48 discrepancies between the modelled and reference sequences:

Chain	Residue	Modelled	Actual	Comment	Reference
A	-22	MET	-	expression tag	UNP P36871
A	-21	HIS	-	expression tag	UNP P36871
A	-20	HIS	-	expression tag	UNP P36871
A	-19	HIS	-	expression tag	UNP P36871
A	-18	HIS	-	expression tag	UNP P36871
A	-17	HIS	-	expression tag	UNP P36871
A	-16	HIS	-	expression tag	UNP P36871
A	-15	SER	-	expression tag	UNP P36871
A	-14	SER	-	expression tag	UNP P36871
A	-13	GLY	-	expression tag	UNP P36871
A	-12	VAL	-	expression tag	UNP P36871
A	-11	ASP	-	expression tag	UNP P36871
A	-10	LEU	-	expression tag	UNP P36871
A	-9	GLY	-	expression tag	UNP P36871
A	-8	THR	-	expression tag	UNP P36871
A	-7	GLU	-	expression tag	UNP P36871
A	-6	ASN	-	expression tag	UNP P36871
A	-5	LEU	-	expression tag	UNP P36871
A	-4	TYR	-	expression tag	UNP P36871
A	-3	PHE	-	expression tag	UNP P36871
A	-2	GLN	-	expression tag	UNP P36871
A	-1	SER	-	expression tag	UNP P36871
A	0	ASN	-	expression tag	UNP P36871
A	263	GLY	ASP	conflict	UNP P36871
B	-22	MET	-	expression tag	UNP P36871

Continued on next page...

Continued from previous page...

Chain	Residue	Modelled	Actual	Comment	Reference
B	-21	HIS	-	expression tag	UNP P36871
B	-20	HIS	-	expression tag	UNP P36871
B	-19	HIS	-	expression tag	UNP P36871
B	-18	HIS	-	expression tag	UNP P36871
B	-17	HIS	-	expression tag	UNP P36871
B	-16	HIS	-	expression tag	UNP P36871
B	-15	SER	-	expression tag	UNP P36871
B	-14	SER	-	expression tag	UNP P36871
B	-13	GLY	-	expression tag	UNP P36871
B	-12	VAL	-	expression tag	UNP P36871
B	-11	ASP	-	expression tag	UNP P36871
B	-10	LEU	-	expression tag	UNP P36871
B	-9	GLY	-	expression tag	UNP P36871
B	-8	THR	-	expression tag	UNP P36871
B	-7	GLU	-	expression tag	UNP P36871
B	-6	ASN	-	expression tag	UNP P36871
B	-5	LEU	-	expression tag	UNP P36871
B	-4	TYR	-	expression tag	UNP P36871
B	-3	PHE	-	expression tag	UNP P36871
B	-2	GLN	-	expression tag	UNP P36871
B	-1	SER	-	expression tag	UNP P36871
B	0	ASN	-	expression tag	UNP P36871
B	263	GLY	ASP	conflict	UNP P36871

- Molecule 2 is SULFATE ION (three-letter code: SO4) (formula: O_4S).

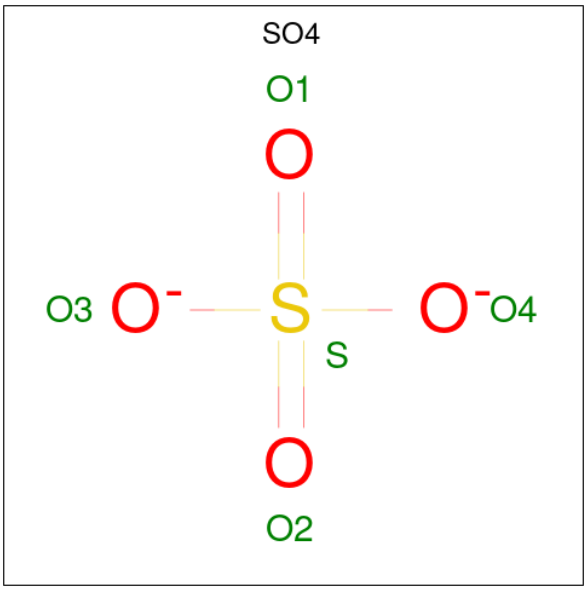

Mol	Chain	Residues	Atoms			ZeroOcc	AltConf
			Total	O	S		
2	A	1	5	4	1	0	0
			Total	O	S		
2	A	1	5	4	1	0	0
			Total	O	S		
2	A	1	5	4	1	0	0
			Total	O	S		
2	B	1	5	4	1	0	0

- Molecule 3 is CALCIUM ION (three-letter code: CA) (formula: Ca).

Mol	Chain	Residues	Atoms		ZeroOcc	AltConf
			Total	Ca		
3	A	1	1	1	0	0
			Total	Ca		
3	B	1	1	1	0	0

- Molecule 4 is GLYCEROL (three-letter code: GOL) (formula: $C_3H_8O_3$).

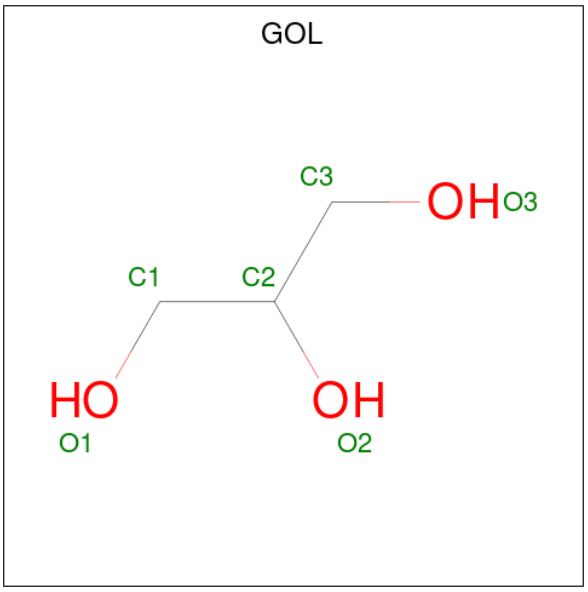

Mol	Chain	Residues	Atoms			ZeroOcc	AltConf
			Total	C	O		
4	A	1	6	3	3	0	0

- Molecule 5 is water.

Mol	Chain	Residues	Atoms		ZeroOcc	AltConf
			Total	O		
5	A	125	125	125	0	0
			Total	O		
5	B	79	79	79	0	0

3 Residue-property plots (i)

These plots are drawn for all protein, RNA, DNA and oligosaccharide chains in the entry. The first graphic for a chain summarises the proportions of the various outlier classes displayed in the second graphic. The second graphic shows the sequence view annotated by issues in geometry and electron density. Residues are color-coded according to the number of geometric quality criteria for which they contain at least one outlier: green = 0, yellow = 1, orange = 2 and red = 3 or more. A red dot above a residue indicates a poor fit to the electron density (RSRZ > 2). Stretches of 2 or more consecutive residues without any outlier are shown as a green connector. Residues present in the sample, but not in the model, are shown in grey.

• Molecule 1: Phosphoglucomutase-1

Chain A:

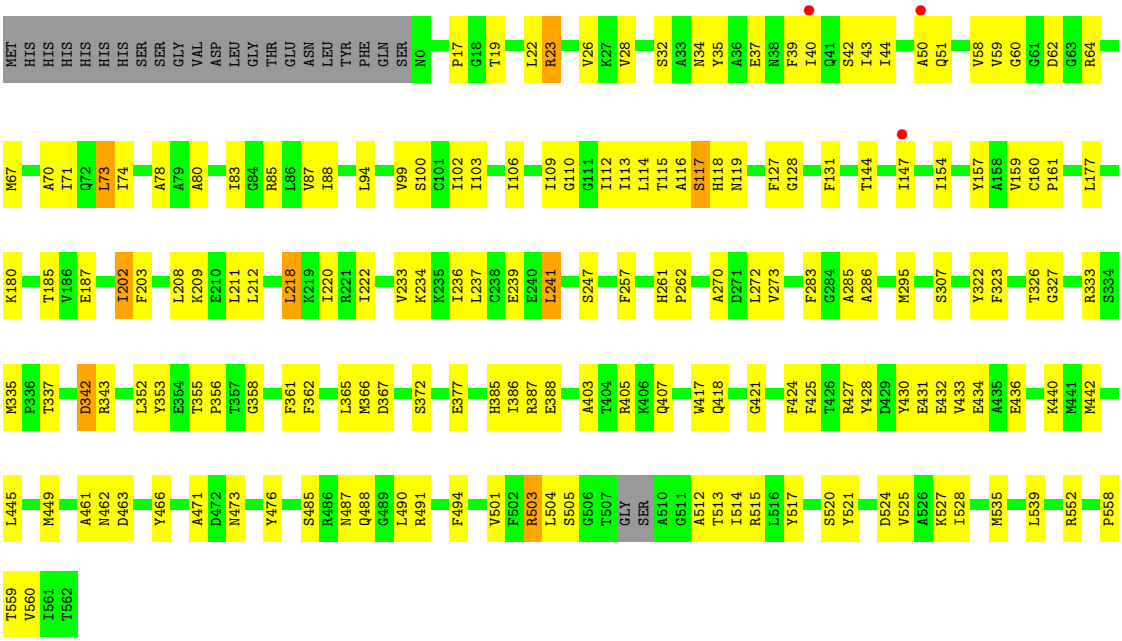

• Molecule 1: Phosphoglucomutase-1

Chain B:

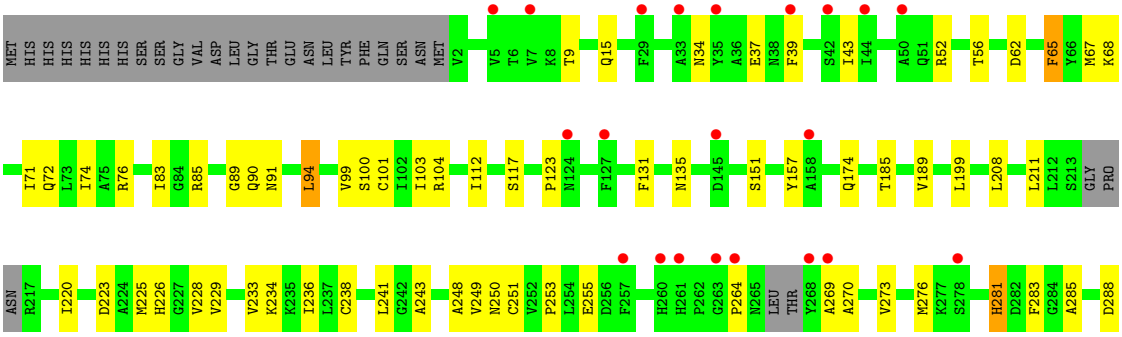

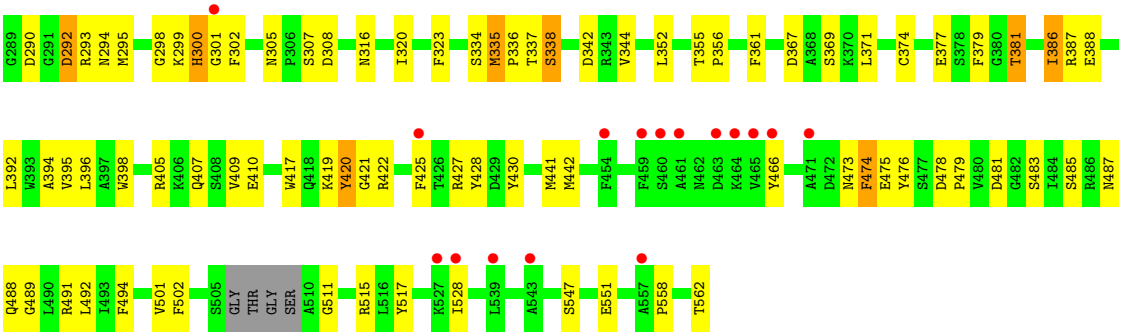
G289 D290 G291 D292 R293 N294 M295 G298 K299 H300 G301 F302 N305 P306 S307 D308 N316 I320 F323 S334 M335 P336 T337 S338 D342 R343 V344 L352 T355 P356 F361 D367 A368 S369 K370 L371 C374 E377 S378 F379 G380 T381 I386 R387 E388
L392 W393 A394 V395 L396 A397 W398 R405 K406 Q407 S408 V409 E410 W417 Q418 K419 Y420 G421 R422 F425 T426 R427 Y428 D429 Y430 M441 M442 F454 F459 S460 A461 N462 D463 K464 V465 Y466 A471 D472 N473 F474 E475 Y476 S477 D478 P479 V480 D481 G482 S483 I484 S485 R486 N487
Q488 G489 L490 R491 L492 I493 F494 V501 F502 S505 GLY THR GLY SER A510 G511 R515 L516 Y517 K527 I528 L539 A543 S547 E551 A557 P558 T562

4 Data and refinement statistics (i)

Property	Value	Source
Space group	P 41 21 2	Depositor
Cell constants a, b, c, α, β, γ	172.12Å 172.12Å 99.00Å 90.00° 90.00° 90.00°	Depositor
Resolution (Å)	51.84 – 2.50 54.43 – 2.50	Depositor EDS
% Data completeness (in resolution range)	85.0 (51.84-2.50) 85.3 (54.43-2.50)	Depositor EDS
R_{merge}	0.19	Depositor
R_{sym}	(Not available)	Depositor
$< I/\sigma(I) >$ [1]	1.62 (at 2.51Å)	Xtriage
Refinement program	PHENIX (1.10.1_2155: 000)	Depositor
R, R_{free}	0.220 , 0.292 0.223 , 0.297	Depositor DCC
R_{free} test set	2217 reflections (5.00%)	wwPDB-VP
Wilson B-factor (Å^2)	44.3	Xtriage
Anisotropy	0.348	Xtriage
Bulk solvent k_{sol}(e/Å^3), B_{sol}(Å^2)	0.33 , 82.4	EDS
L-test for twinning[2]	$< \|L\| > = 0.47$, $< L^2 > = 0.30$	Xtriage
Estimated twinning fraction	No twinning to report.	Xtriage
F_o,F_c correlation	0.93	EDS
Total number of atoms	8233	wwPDB-VP
Average B, all atoms (Å^2)	56.0	wwPDB-VP

Xtriage's analysis on translational NCS is as follows: *The largest off-origin peak in the Patterson function is 2.48% of the height of the origin peak. No significant pseudotranslation is detected.*

[1] Intensities estimated from amplitudes.

[2] Theoretical values of $< |L| >$, $< L^2 >$ for acentric reflections are 0.5, 0.333 respectively for untwinned datasets, and 0.375, 0.2 for perfectly twinned datasets.

5 Model quality (i)

5.1 Standard geometry (i)

Bond lengths and bond angles in the following residue types are not validated in this section: CA, SEP, GOL, SO4

The Z score for a bond length (or angle) is the number of standard deviations the observed value is removed from the expected value. A bond length (or angle) with $|Z| > 5$ is considered an outlier worth inspection. RMSZ is the root-mean-square of all Z scores of the bond lengths (or angles).

Mol	Chain	Bond lengths		Bond angles	
		RMSZ	$\#\|Z\|>5$	RMSZ	$\#\|Z\|>5$
1	A	0.50	0/4277	0.70	4/5805 (0.1%)
1	B	0.44	1/3885 (0.0%)	0.61	2/5305 (0.0%)
All	All	0.48	1/8162 (0.0%)	0.66	6/11110 (0.1%)

All (1) bond length outliers are listed below:

Mol	Chain	Res	Type	Atoms	Z	Observed(Å)	Ideal(Å)
1	B	420	TYR	CE1-CZ	-6.44	1.30	1.38

All (6) bond angle outliers are listed below:

Mol	Chain	Res	Type	Atoms	Z	Observed(^{o})	Ideal(^{o})
1	B	211	LEU	CA-CB-CG	6.06	129.23	115.30
1	A	73	LEU	CB-CG-CD1	-6.03	100.75	111.00
1	A	241	LEU	CA-CB-CG	5.86	128.78	115.30
1	B	94	LEU	CB-CG-CD2	-5.47	101.69	111.00
1	A	503	ARG	NE-CZ-NH2	-5.41	117.60	120.30
1	A	218	LEU	CB-CG-CD1	5.14	119.74	111.00

There are no chirality outliers.

There are no planarity outliers.

5.2 Too-close contacts (i)

In the following table, the Non-H and H(model) columns list the number of non-hydrogen atoms and hydrogen atoms in the chain respectively. The H(added) column lists the number of hydrogen atoms added and optimized by MolProbity. The Clashes column lists the number of clashes within the asymmetric unit, whereas Symm-Clashes lists symmetry-related clashes.

Mol	Chain	Non-H	H(model)	H(added)	Clashes	Symm-Clashes
1	A	4188	0	3999	163	0
1	B	3813	0	3190	130	0
2	A	15	0	0	4	0
2	B	5	0	0	3	0
3	A	1	0	0	0	0
3	B	1	0	0	0	0
4	A	6	0	8	2	0
5	A	125	0	0	3	0
5	B	79	0	0	5	0
All	All	8233	0	7197	293	0

The all-atom clashscore is defined as the number of clashes found per 1000 atoms (including hydrogen atoms). The all-atom clashscore for this structure is 19.

All (293) close contacts within the same asymmetric unit are listed below, sorted by their clash magnitude.

Atom-1	Atom-2	Interatomic distance (Å)	Clash overlap (Å)
1:A:367:ASP:OD1	1:A:387:ARG:NH2	1.95	0.99
1:A:58:VAL:HG22	1:A:103:ILE:HD11	1.49	0.91
1:A:43:ILE:HA	1:A:147:ILE:HD13	1.58	0.82
1:A:62:ASP:OD2	1:A:64:ARG:NH1	2.14	0.81
1:A:386[A]:ILE:HG22	1:A:388:GLU:H	1.47	0.80
1:B:220:ILE:HG22	1:B:283:PHE:HB3	1.64	0.80
1:B:342:ASP:OD1	1:B:352:LEU:HD11	1.83	0.79
1:A:323:PHE:HA	1:A:326:THR:HG22	1.64	0.78
1:A:431:GLU:HA	1:A:513:THR:HG22	1.65	0.78
1:A:202:ILE:HB	1:A:322:TYR:HB2	1.68	0.76
1:B:335:MET:HE1	1:B:501:VAL:HG21	1.67	0.76
1:A:326:THR:HG23	1:A:327:GLY:O	1.85	0.76
1:B:226:HIS:CE1	1:B:250[A]:ASN:HD21	2.04	0.75
1:A:58:VAL:HG12	1:A:87:VAL:CG1	2.17	0.74
1:A:58:VAL:HG12	1:A:87:VAL:HG13	1.69	0.74
1:A:43:ILE:CA	1:A:147:ILE:HD13	2.18	0.74
1:A:211:LEU:HD13	1:A:403:ALA:HB2	1.72	0.72
1:A:78:ALA:HA	1:A:83:ILE:HD12	1.72	0.71
1:A:43:ILE:CA	1:A:147:ILE:CD1	2.68	0.71
1:B:473:ASN:OD1	1:B:487:ASN:HA	1.91	0.70
1:A:64:ARG:NH1	1:A:116:ALA:H	1.88	0.70
1:B:9:THR:HA	1:B:34:ASN:HD22	1.57	0.70
1:A:43:ILE:HA	1:A:147:ILE:CD1	2.22	0.69
1:A:34:ASN:ND2	1:A:37:GLU:OE2	2.27	0.68
1:A:71:ILE:HA	1:A:74:ILE:HD12	1.76	0.68

Continued on next page...

Continued from previous page...

Atom-1	Atom-2	Interatomic distance (Å)	Clash overlap (Å)
1:B:264:PRO:HD3	1:B:288:ASP:HB3	1.76	0.67
1:A:405:ARG:NH2	1:A:407:GLN:OE1	2.24	0.67
1:A:434:GLU:OE1	1:A:436:GLU:N	2.27	0.67
1:B:377:GLU:HG3	1:B:425:PHE:HZ	1.59	0.67
1:A:159:VAL:HG13	1:A:161:PRO:HD3	1.77	0.66
1:A:358:GLY:HA2	4:A:605:GOL:H31	1.76	0.66
1:A:505[B]:SER:OG	1:A:513:THR:OG1	2.11	0.66
1:A:37:GLU:OE1	1:A:73:LEU:HD11	1.94	0.66
1:A:26:VAL:HG12	1:A:127:PHE:HB2	1.79	0.65
1:A:70:ALA:HB3	1:A:114:LEU:HD21	1.78	0.65
1:A:17:PRO:HG2	1:A:147:ILE:HG21	1.78	0.64
1:B:37:GLU:N	1:B:37:GLU:OE1	2.30	0.64
1:A:342:ASP:HA	1:A:352:LEU:HD13	1.80	0.64
1:A:211:LEU:HG	1:A:218:LEU:HD22	1.80	0.64
1:B:491:ARG:HA	1:B:501:VAL:HG22	1.80	0.64
1:A:432:GLU:H	1:A:513:THR:HG22	1.62	0.64
1:B:515:ARG:NH1	2:B:601:SO4:O4	2.30	0.63
1:B:283:PHE:CZ	1:B:395:VAL:HG23	2.34	0.63
1:B:377:GLU:HG3	1:B:425:PHE:CZ	2.33	0.63
1:A:559:THR:HG22	1:A:560:VAL:HG23	1.80	0.63
1:B:292:ASP:OD2	1:B:293:ARG:HG3	1.99	0.63
1:B:466:TYR:HB3	1:B:494:PHE:CD1	2.33	0.63
1:A:377:GLU:HG3	1:A:425:PHE:CZ	2.34	0.63
1:A:58:VAL:HG11	1:A:102:ILE:HG22	1.82	0.62
1:B:298:GLY:CA	1:B:409:VAL:HG11	2.30	0.62
1:B:90:GLN:HG2	1:B:91:ASN:OD1	2.00	0.61
1:A:236:ILE:O	1:A:241:LEU:HD23	2.00	0.61
1:A:270:ALA:HA	1:A:273:VAL:HB	1.83	0.61
1:A:257:PHE:CG	1:A:262:PRO:HG3	2.34	0.61
1:B:515:ARG:NH1	2:B:601:SO4:S	2.62	0.61
1:A:237:LEU:HA	1:A:241:LEU:HD21	1.83	0.61
1:B:298:GLY:N	1:B:302:PHE:O	2.33	0.60
1:A:17:PRO:HG2	1:A:147:ILE:CG2	2.31	0.60
1:A:503:ARG:NH2	2:A:602:SO4:O3	2.35	0.60
1:A:177:LEU:HB2	1:A:180:LYS:HB2	1.84	0.60
1:A:362:PHE:O	1:A:366:MET:HG3	2.00	0.60
1:B:335:MET:HG3	1:B:336:PRO:HD3	1.84	0.59
1:A:440:LYS:HD2	1:A:552:ARG:HD2	1.84	0.59
1:A:211:LEU:HD13	1:A:403:ALA:CB	2.33	0.59
1:A:43:ILE:HD11	1:A:131:PHE:CD2	2.38	0.59
1:A:356:PRO:HG2	1:A:361:PHE:CZ	2.37	0.59

Continued on next page...

Continued from previous page...

Atom-1	Atom-2	Interatomic distance (Å)	Clash overlap (Å)
1:A:527:LYS:HB3	1:A:535:MET:CE	2.33	0.59
1:B:71:ILE:HA	1:B:74:ILE:HD12	1.84	0.58
1:B:421:GLY:HA2	1:B:528:ILE:HD11	1.85	0.58
1:B:405[B]:ARG:NH1	1:B:407:GLN:OE1	2.34	0.57
1:B:112:ILE:HG22	1:B:131:PHE:HD2	1.68	0.57
1:A:385:HIS:CD2	1:A:386[A]:ILE:HG12	2.39	0.57
1:A:428:TYR:CD2	1:A:558:PRO:HG3	2.39	0.57
1:A:333:ARG:HD2	1:A:337:THR:HB	1.87	0.57
1:B:101:CYS:HA	1:B:386:ILE:HD11	1.85	0.57
1:A:43:ILE:N	1:A:147:ILE:CD1	2.68	0.57
1:A:109:ILE:HD12	1:A:110:GLY:N	2.20	0.57
1:A:505[A]:SER:HB3	1:A:513:THR:OG1	2.05	0.56
1:B:236:ILE:O	1:B:241:LEU:HD12	2.05	0.56
1:B:386:ILE:HG22	1:B:388:GLU:H	1.70	0.56
1:B:427:ARG:HB3	1:B:562:THR:OG1	2.05	0.56
1:A:501:VAL:HG23	1:A:517:TYR:CD1	2.40	0.56
1:B:68:LYS:O	1:B:72:GLN:HG2	2.05	0.56
1:B:344:VAL:HA	1:B:420:TYR:CZ	2.41	0.56
1:A:234:LYS:O	1:A:239:GLU:HG3	2.06	0.56
1:B:9:THR:HA	1:B:34:ASN:ND2	2.19	0.56
1:A:44:ILE:HG12	1:A:83:ILE:HD11	1.88	0.56
1:A:62:ASP:OD1	1:A:64:ARG:HG3	2.06	0.56
1:B:335:MET:SD	1:B:474:PHE:HD1	2.29	0.55
1:B:337:THR:HA	1:B:377:GLU:HB2	1.87	0.55
1:B:104[A]:ARG:HD3	1:B:135:ASN:O	2.06	0.55
1:A:356:PRO:HG2	1:A:361:PHE:CE1	2.42	0.55
1:B:199:LEU:HD23	1:B:396:LEU:HD22	1.89	0.55
1:A:40:ILE:HD12	1:A:73:LEU:CD2	2.37	0.54
1:B:229:VAL:O	1:B:233:VAL:HG23	2.07	0.54
1:B:37:GLU:HB3	1:B:157:TYR:CE2	2.42	0.54
1:A:40:ILE:HD12	1:A:73:LEU:HD22	1.89	0.54
1:B:294:ASN:O	1:B:379:PHE:HB3	2.08	0.54
1:A:501:VAL:CG2	1:A:517:TYR:HB2	2.38	0.54
1:B:515:ARG:NH1	2:B:601:SO4:O1	2.37	0.54
1:B:298:GLY:HA3	1:B:409:VAL:HG11	1.89	0.53
1:A:212:LEU:HD12	1:A:241:LEU:CD1	2.39	0.53
1:A:471:ALA:HA	1:A:491:ARG:O	2.08	0.53
1:B:99:VAL:O	1:B:103:ILE:HG13	2.08	0.53
1:B:442:MET:HE1	1:B:502:PHE:HB3	1.90	0.53
1:B:67[B]:MET:HE2	1:B:71:ILE:HD11	1.91	0.53
1:B:189:VAL:HG11	5:B:768:HOH:O	2.08	0.53

Continued on next page...

Continued from previous page...

Atom-1	Atom-2	Interatomic distance (Å)	Clash overlap (Å)
1:A:261:HIS:ND1	2:A:603:SO4:O2	2.25	0.53
1:A:43:ILE:HB	1:A:147:ILE:CD1	2.39	0.52
1:B:473:ASN:HD22	1:B:489:GLY:C	2.12	0.52
1:A:43:ILE:CB	1:A:147:ILE:HD13	2.40	0.52
1:B:419:LYS:HE3	1:B:420:TYR:CG	2.44	0.52
1:B:234:LYS:O	1:B:238:CYS:HB2	2.09	0.52
1:A:40:ILE:HD13	1:A:74:ILE:HG13	1.92	0.52
1:A:220:ILE:HD12	1:A:247:SER:HB3	1.91	0.52
1:B:39:PHE:O	1:B:43:ILE:HG12	2.09	0.52
1:B:298:GLY:HA2	1:B:409:VAL:HG11	1.92	0.52
1:A:22:LEU:O	1:A:128:GLY:HA2	2.10	0.52
1:A:43:ILE:HD11	1:A:131:PHE:CG	2.45	0.52
1:A:485:SER:HB3	1:A:488:GLN:NE2	2.25	0.52
1:A:212:LEU:HD23	1:A:218:LEU:HD21	1.93	0.51
1:A:237:LEU:HA	1:A:241:LEU:CD2	2.40	0.51
1:A:445:LEU:HD13	1:A:449:MET:SD	2.50	0.51
1:A:43:ILE:HB	1:A:147:ILE:HD13	1.91	0.51
1:B:112:ILE:HG22	1:B:131:PHE:CD2	2.46	0.51
1:A:67:MET:HG3	1:A:114:LEU:HD22	1.93	0.51
1:A:50:ALA:HB3	1:A:51:GLN:NE2	2.25	0.51
1:A:212:LEU:HD23	1:A:218:LEU:CD2	2.40	0.51
1:B:65:PHE:CE2	1:B:123:PRO:HA	2.45	0.51
1:A:430:TYR:HB2	1:A:514:ILE:HB	1.92	0.51
1:B:476:TYR:CE2	1:B:478:ASP:HA	2.45	0.51
1:A:211:LEU:CD2	1:A:218:LEU:CD2	2.90	0.50
1:A:501:VAL:HG22	1:A:517:TYR:HB2	1.92	0.50
1:A:43:ILE:HD13	1:A:112:ILE:HD11	1.93	0.50
1:B:290:ASP:OD1	1:B:290:ASP:N	2.32	0.50
1:B:474:PHE:HD2	1:B:475:GLU:N	2.09	0.50
1:B:52:ARG:HB3	1:B:83:ILE:HD13	1.92	0.50
1:A:60:GLY:HA3	1:A:94:LEU:HB2	1.93	0.50
1:B:174:GLN:HG2	1:B:185:THR:HG22	1.92	0.50
1:B:381:THR:OG1	1:B:394:ALA:HB2	2.12	0.50
1:B:335:MET:N	1:B:355:THR:O	2.45	0.50
1:A:34:ASN:ND2	1:A:157:TYR:OH	2.45	0.50
1:A:220:ILE:HG22	1:A:283:PHE:HB3	1.92	0.50
1:B:344:VAL:HA	1:B:420:TYR:CE1	2.46	0.50
1:B:334:SER:HG	1:B:337:THR:HG1	1.60	0.49
1:A:144:THR:HA	1:A:147:ILE:HG22	1.94	0.49
1:B:76:ARG:NH2	5:B:701:HOH:O	2.19	0.49
1:B:466:TYR:CD2	1:B:494:PHE:HD1	2.30	0.49

Continued on next page...

Continued from previous page...

Atom-1	Atom-2	Interatomic distance (Å)	Clash overlap (Å)
1:A:37:GLU:HG3	1:A:73:LEU:HD21	1.95	0.49
1:A:307:SER:HB3	1:A:337:THR:HG23	1.93	0.49
1:A:356:PRO:HD3	1:A:476:TYR:CG	2.48	0.49
1:A:520:SER:HB2	1:A:539:LEU:HD12	1.95	0.49
1:A:64:ARG:NH2	1:A:119:ASN:O	2.30	0.49
1:B:223:ASP:OD2	1:B:225:MET:N	2.43	0.49
1:A:211:LEU:CD1	1:A:403:ALA:HA	2.42	0.49
1:B:356:PRO:HG2	1:B:361:PHE:CZ	2.48	0.49
1:B:283:PHE:CE1	1:B:395:VAL:HG23	2.48	0.48
1:B:473:ASN:ND2	1:B:489:GLY:H	2.11	0.48
1:A:43:ILE:N	1:A:147:ILE:HD11	2.28	0.48
1:A:19:THR:HG21	4:A:605:GOL:H32	1.95	0.48
1:B:89:GLY:HA3	1:B:94:LEU:HG	1.96	0.48
1:A:501:VAL:HG23	1:A:517:TYR:HD1	1.77	0.48
1:A:211:LEU:CG	1:A:218:LEU:HD22	2.43	0.48
1:A:417:TRP:O	1:A:421:GLY:N	2.46	0.48
1:A:485:SER:HB3	1:A:488:GLN:HE21	1.79	0.48
1:B:409:VAL:HG13	1:B:410:GLU:N	2.29	0.48
1:A:118:HIS:O	1:A:262:PRO:HD2	2.13	0.48
1:B:56:THR:OG1	1:B:85:ARG:HB3	2.14	0.48
1:A:222:ILE:HG13	1:A:237:LEU:HD13	1.95	0.48
1:A:58:VAL:HG23	1:A:99:VAL:HG13	1.96	0.47
1:B:427:ARG:HD2	1:B:517:TYR:CE2	2.49	0.47
1:B:417:TRP:CE2	1:B:422:ARG:HD2	2.49	0.47
1:B:72:GLN:O	1:B:76:ARG:HG3	2.14	0.47
1:B:473:ASN:HD21	1:B:489:GLY:H	1.62	0.47
1:B:316:ASN:HD21	1:B:405[B]:ARG:HE	1.63	0.47
1:B:74:ILE:HG12	1:B:112:ILE:HD11	1.97	0.47
1:A:272:LEU:HD22	1:A:286:ALA:HB2	1.97	0.47
1:A:58:VAL:HG22	1:A:103:ILE:CD1	2.34	0.46
1:B:56:THR:HA	1:B:85:ARG:O	2.15	0.46
1:B:223:ASP:HA	1:B:249:VAL:O	2.15	0.46
1:A:525:VAL:HA	1:A:528:ILE:CG2	2.45	0.46
1:A:377:GLU:HG3	1:A:425:PHE:HZ	1.80	0.46
1:A:515:ARG:NE	2:A:602:SO4:O3	2.46	0.46
1:B:305:ASN:HB3	1:B:308:ASP:HB2	1.98	0.46
1:A:28:VAL:O	1:A:32:SER:HB3	2.15	0.46
1:B:305:ASN:OD1	1:B:307:SER:N	2.49	0.46
1:B:485:SER:HB3	1:B:488:GLN:HE21	1.81	0.46
1:A:211:LEU:HD13	1:A:403:ALA:CA	2.46	0.46
1:B:283:PHE:HZ	1:B:395:VAL:HG23	1.81	0.46

Continued on next page...

Continued from previous page...

Atom-1	Atom-2	Interatomic distance (Å)	Clash overlap (Å)
1:A:42:SER:C	1:A:147:ILE:HD12	2.37	0.46
1:A:211:LEU:CD2	1:A:218:LEU:HD22	2.46	0.46
1:A:208:LEU:HB3	1:A:241:LEU:CD1	2.45	0.45
1:B:481:ASP:OD1	1:B:483:SER:N	2.48	0.45
1:A:62:ASP:OD2	1:A:115:THR:OG1	2.21	0.45
1:B:377:GLU:OE1	1:B:427:ARG:HD3	2.16	0.45
1:B:425:PHE:HE2	5:B:748:HOH:O	1.98	0.45
1:B:442:MET:CE	1:B:502:PHE:HB3	2.46	0.45
1:A:387:ARG:NE	5:A:701:HOH:O	2.14	0.45
1:B:299:LYS:C	1:B:301:GLY:H	2.19	0.45
1:A:323:PHE:HE2	1:A:372:SER:HB3	1.80	0.45
1:B:371:LEU:HD21	1:B:374:CYS:HB3	1.97	0.45
1:B:253:PRO:HB3	5:B:706:HOH:O	2.15	0.45
1:B:367:ASP:OD2	1:B:387:ARG:NE	2.38	0.45
1:A:17:PRO:HG3	1:A:39:PHE:CZ	2.51	0.45
1:A:202:ILE:HD11	1:A:203:PHE:CZ	2.51	0.45
1:A:59:VAL:HG22	1:A:88:ILE:HG12	1.98	0.45
1:A:505[B]:SER:HB2	2:A:602:SO4:O1	2.17	0.45
1:B:392:LEU:HA	1:B:395:VAL:HG12	1.98	0.45
1:B:441:MET:HG3	1:B:547:SER:O	2.16	0.45
1:B:356:PRO:HG2	1:B:361:PHE:CE2	2.52	0.45
1:B:369:SER:HA	5:B:720:HOH:O	2.17	0.45
1:A:461:ALA:O	1:A:463:ASP:N	2.50	0.44
1:B:208:LEU:HB2	1:B:241:LEU:HD22	1.99	0.44
1:B:386:ILE:HA	1:B:386:ILE:HD13	1.57	0.44
1:A:100:SER:OG	1:A:386[A]:ILE:HG23	2.17	0.44
1:A:94:LEU:HD13	1:A:99:VAL:HG22	1.99	0.44
1:A:103:ILE:HD13	1:A:103:ILE:HA	1.74	0.44
1:A:117:SEP:OG	1:A:118:HIS:N	2.50	0.44
1:B:248:ALA:HB1	1:B:251:CYS:SG	2.57	0.44
1:B:281:HIS:CE1	1:B:300:HIS:N	2.85	0.44
1:B:316:ASN:ND2	1:B:405[A]:ARG:HD3	2.32	0.44
1:B:417:TRP:HB3	1:B:528:ILE:HG21	1.99	0.44
1:A:466:TYR:HB3	1:A:494:PHE:CD2	2.53	0.44
1:B:67[B]:MET:CE	1:B:71:ILE:HD11	2.48	0.44
1:A:64:ARG:CZ	1:A:116:ALA:HB3	2.48	0.44
1:B:427:ARG:HE	1:B:515:ARG:HD3	1.82	0.44
1:B:428:TYR:CD1	1:B:558:PRO:HG3	2.52	0.44
1:A:87:VAL:HA	1:A:187:GLU:O	2.17	0.44
1:A:64:ARG:NH2	1:A:117:SEP:O	2.43	0.43
1:A:433:VAL:HG22	1:A:512:ALA:O	2.17	0.43

Continued on next page...

Continued from previous page...

Atom-1	Atom-2	Interatomic distance (Å)	Clash overlap (Å)
1:B:307:SER:CB	1:B:338:SER:HB3	2.47	0.43
1:B:492[A]:LEU:HB3	1:B:494:PHE:HE2	1.82	0.43
1:A:118:HIS:HB3	5:A:796:HOH:O	2.17	0.43
1:B:270:ALA:HA	1:B:273:VAL:HG22	2.00	0.43
1:B:276:MET:O	1:B:281:HIS:CE1	2.71	0.43
1:A:23:ARG:HH22	1:A:117:SEP:HB2	1.82	0.43
1:A:58:VAL:CG2	1:A:103:ILE:HD11	2.33	0.43
1:A:424:PHE:CE2	1:A:535:MET:HG3	2.53	0.43
1:A:17:PRO:HG3	1:A:39:PHE:HZ	1.83	0.43
1:A:212:LEU:HD23	1:A:212:LEU:HA	1.78	0.43
1:A:323:PHE:CE2	1:A:372:SER:HB3	2.54	0.43
1:A:102:ILE:O	1:A:106:ILE:HG12	2.19	0.43
1:B:466:TYR:HB3	1:B:494:PHE:HD1	1.82	0.43
1:B:478:ASP:HB3	1:B:481:ASP:OD1	2.19	0.43
1:A:212:LEU:CD2	1:A:218:LEU:HD21	2.48	0.43
1:A:343:ARG:NH2	1:A:521:TYR:CZ	2.87	0.43
1:B:72:GLN:HB2	1:B:76:ARG:HH12	1.83	0.43
1:B:65:PHE:N	1:B:255:GLU:O	2.46	0.43
1:B:220:ILE:HD11	1:B:243:ALA:CB	2.48	0.43
1:A:211:LEU:CD2	1:A:218:LEU:HD21	2.49	0.43
1:A:343:ARG:CZ	1:A:521:TYR:CZ	3.01	0.43
1:B:285:ALA:HA	1:B:295:MET:O	2.19	0.43
1:A:39:PHE:O	1:A:43:ILE:HG22	2.19	0.42
1:B:15:GLN:OE1	1:B:151:SER:HB2	2.19	0.42
1:A:527:LYS:HB3	1:A:535:MET:HE1	1.98	0.42
1:A:237:LEU:HD23	1:A:241:LEU:HD21	2.02	0.42
1:B:72:GLN:HG2	1:B:72:GLN:H	1.66	0.42
1:B:335:MET:HG3	1:B:336:PRO:CD	2.50	0.42
1:A:233:VAL:O	1:A:237:LEU:HB2	2.19	0.42
1:B:478:ASP:HA	1:B:479:PRO:HD3	1.85	0.42
1:A:442:MET:HG3	1:A:504:LEU:HD13	2.01	0.42
1:B:551:GLU:OE1	1:B:551:GLU:N	2.47	0.42
1:A:335:MET:N	1:A:355:THR:O	2.47	0.42
1:A:40:ILE:HD13	1:A:74:ILE:CG1	2.50	0.42
1:B:62:ASP:HA	1:B:228:VAL:HB	2.02	0.42
1:B:112:ILE:HD13	1:B:112:ILE:HG21	1.74	0.42
1:B:208:LEU:HD23	1:B:208:LEU:HA	1.87	0.42
1:B:220:ILE:HD11	1:B:243:ALA:HB1	2.01	0.42
1:B:386:ILE:HG22	1:B:388:GLU:O	2.20	0.41
1:A:99:VAL:HG11	1:A:113:ILE:HG12	2.02	0.41
1:A:285:ALA:HA	1:A:295:MET:O	2.20	0.41

Continued on next page...

Continued from previous page...

Atom-1	Atom-2	Interatomic distance (Å)	Clash overlap (Å)
1:B:392:LEU:HD12	1:B:395:VAL:HG13	2.03	0.41
1:B:430:TYR:CE1	1:B:558:PRO:HA	2.55	0.41
1:A:58:VAL:HG11	1:A:102:ILE:CG2	2.49	0.41
1:A:35:TYR:HB3	5:A:708:HOH:O	2.20	0.41
1:A:42:SER:C	1:A:147:ILE:CD1	2.89	0.41
1:B:269:ALA:O	1:B:273:VAL:HG13	2.20	0.41
1:A:80:ALA:HB2	1:A:160:CYS:SG	2.60	0.41
1:B:208:LEU:HB2	1:B:241:LEU:CD2	2.51	0.41
1:B:270:ALA:O	1:B:273:VAL:HG22	2.20	0.41
1:A:85:ARG:HA	1:A:185:THR:O	2.20	0.41
1:A:353:TYR:CD1	1:A:365:LEU:HD13	2.56	0.41
1:A:490:LEU:O	1:A:501:VAL:HA	2.21	0.41
1:A:180:LYS:HD3	1:A:180:LYS:HA	1.87	0.41
1:B:100:SER:OG	1:B:386:ILE:HG23	2.22	0.40
1:A:58:VAL:CG2	1:A:99:VAL:HG13	2.51	0.40
1:A:473:ASN:CG	1:A:487:ASN:HA	2.41	0.40
1:A:257:PHE:CD2	1:A:262:PRO:HG3	2.56	0.40
1:A:59:VAL:HG11	1:A:74:ILE:HG21	2.03	0.40
1:A:473:ASN:ND2	1:A:487:ASN:HA	2.36	0.40
1:A:524:ASP:HB3	1:A:527:LYS:HG3	2.03	0.40
1:B:295:MET:HG3	1:B:379:PHE:HE2	1.87	0.40
1:B:320:ILE:HB	1:B:323:PHE:HD2	1.86	0.40

There are no symmetry-related clashes.

5.3 Torsion angles (i)

5.3.1 Protein backbone (i)

In the following table, the Percentiles column shows the percent Ramachandran outliers of the chain as a percentile score with respect to all X-ray entries followed by that with respect to entries of similar resolution.

The Analysed column shows the number of residues for which the backbone conformation was analysed, and the total number of residues.

Mol	Chain	Analysed	Favoured	Allowed	Outliers	Percentiles	
1	A	564/585 (96%)	545 (97%)	17 (3%)	2 (0%)	34	54
1	B	550/585 (94%)	506 (92%)	42 (8%)	2 (0%)	34	54
All	All	1114/1170 (95%)	1051 (94%)	59 (5%)	4 (0%)	34	54

All (4) Ramachandran outliers are listed below:

Mol	Chain	Res	Type
1	A	154	ILE
1	B	300	HIS
1	A	462	ASN
1	B	511	GLY

5.3.2 Protein sidechains (i)

In the following table, the Percentiles column shows the percent sidechain outliers of the chain as a percentile score with respect to all X-ray entries followed by that with respect to entries of similar resolution.

The Analysed column shows the number of residues for which the sidechain conformation was analysed, and the total number of residues.

Mol	Chain	Analysed	Rotameric	Outliers	Percentiles	
1	A	417/481 (87%)	411 (99%)	6 (1%)	67	86
1	B	304/481 (63%)	295 (97%)	9 (3%)	41	68
All	All	721/962 (75%)	706 (98%)	15 (2%)	53	78

All (15) residues with a non-rotameric sidechain are listed below:

Mol	Chain	Res	Type
1	A	23	ARG
1	A	202	ILE
1	A	209	LYS
1	A	342	ASP
1	A	418	GLN
1	A	427	ARG
1	B	65	PHE
1	B	281	HIS
1	B	292	ASP
1	B	335	MET
1	B	338	SER
1	B	381	THR
1	B	386	ILE
1	B	398	TRP
1	B	474	PHE

Sometimes sidechains can be flipped to improve hydrogen bonding and reduce clashes. All (5) such sidechains are listed below:

Mol	Chain	Res	Type
1	A	34	ASN
1	A	51	GLN
1	A	246	ASN
1	B	316	ASN
1	B	473	ASN

5.3.3 RNA (i)

There are no RNA molecules in this entry.

5.4 Non-standard residues in protein, DNA, RNA chains (i)

2 non-standard protein/DNA/RNA residues are modelled in this entry.

In the following table, the Counts columns list the number of bonds (or angles) for which Mogul statistics could be retrieved, the number of bonds (or angles) that are observed in the model and the number of bonds (or angles) that are defined in the Chemical Component Dictionary. The Link column lists molecule types, if any, to which the group is linked. The Z score for a bond length (or angle) is the number of standard deviations the observed value is removed from the expected value. A bond length (or angle) with $|Z| > 2$ is considered an outlier worth inspection. RMSZ is the root-mean-square of all Z scores of the bond lengths (or angles).

Mol	Type	Chain	Res	Link	Bond lengths			Bond angles		
					Counts	RMSZ	$\#\|Z\| > 2$	Counts	RMSZ	$\#\|Z\| > 2$
1	SEP	A	117	3,1	8,9,10	1.47	2 (25%)	8,12,14	1.73	2 (25%)
1	SEP	B	117	3,1	8,9,10	1.49	1 (12%)	8,12,14	2.60	2 (25%)

In the following table, the Chirals column lists the number of chiral outliers, the number of chiral centers analysed, the number of these observed in the model and the number defined in the Chemical Component Dictionary. Similar counts are reported in the Torsion and Rings columns. '-' means no outliers of that kind were identified.

Mol	Type	Chain	Res	Link	Chirals	Torsions	Rings
1	SEP	A	117	3,1	-	4/5/8/10	-
1	SEP	B	117	3,1	-	2/5/8/10	-

All (3) bond length outliers are listed below:

Mol	Chain	Res	Type	Atoms	Z	Observed(Å)	Ideal(Å)
1	B	117	SEP	P-O1P	3.07	1.60	1.50
1	A	117	SEP	P-O1P	2.79	1.59	1.50
1	A	117	SEP	P-O2P	2.09	1.62	1.54

All (4) bond angle outliers are listed below:

Mol	Chain	Res	Type	Atoms	Z	Observed(^{o})	Ideal(^{o})
1	B	117	SEP	OG-CB-CA	5.68	113.67	108.14
1	B	117	SEP	P-OG-CB	-3.59	108.41	118.30
1	A	117	SEP	OG-CB-CA	3.46	111.51	108.14
1	A	117	SEP	P-OG-CB	-2.50	111.40	118.30

There are no chirality outliers.

All (6) torsion outliers are listed below:

Mol	Chain	Res	Type	Atoms
1	A	117	SEP	CB-OG-P-O2P
1	A	117	SEP	CB-OG-P-O3P
1	B	117	SEP	N-CA-CB-OG
1	A	117	SEP	CB-OG-P-O1P
1	A	117	SEP	N-CA-CB-OG
1	B	117	SEP	CB-OG-P-O1P

There are no ring outliers.

1 monomer is involved in 3 short contacts:

Mol	Chain	Res	Type	Clashes	Symm-Clashes
1	A	117	SEP	3	0

5.5 Carbohydrates (i)

There are no monosaccharides in this entry.

5.6 Ligand geometry (i)

Of 7 ligands modelled in this entry, 2 are monoatomic - leaving 5 for Mogul analysis.

In the following table, the Counts columns list the number of bonds (or angles) for which Mogul statistics could be retrieved, the number of bonds (or angles) that are observed in the model and the number of bonds (or angles) that are defined in the Chemical Component Dictionary. The Link column lists molecule types, if any, to which the group is linked. The Z score for a bond length (or angle) is the number of standard deviations the observed value is removed from the expected value. A bond length (or angle) with $|Z| > 2$ is considered an outlier worth inspection. RMSZ is the root-mean-square of all Z scores of the bond lengths (or angles).

Mol	Type	Chain	Res	Link	Bond lengths			Bond angles		
					Counts	RMSZ	$\#\|Z\| > 2$	Counts	RMSZ	$\#\|Z\| > 2$
4	GOL	A	605	-	5,5,5	0.26	0	5,5,5	0.50	0
2	SO4	A	601	-	4,4,4	0.18	0	6,6,6	0.14	0
2	SO4	A	603	-	4,4,4	0.19	0	6,6,6	0.21	0
2	SO4	A	602	-	4,4,4	0.16	0	6,6,6	0.34	0
2	SO4	B	601	-	4,4,4	0.17	0	6,6,6	0.08	0

In the following table, the Chirals column lists the number of chiral outliers, the number of chiral centers analysed, the number of these observed in the model and the number defined in the Chemical Component Dictionary. Similar counts are reported in the Torsion and Rings columns. '-' means no outliers of that kind were identified.

Mol	Type	Chain	Res	Link	Chirals	Torsions	Rings
4	GOL	A	605	-	-	0/4/4/4	-

There are no bond length outliers.

There are no bond angle outliers.

There are no chirality outliers.

There are no torsion outliers.

There are no ring outliers.

4 monomers are involved in 9 short contacts:

Mol	Chain	Res	Type	Clashes	Symm-Clashes
4	A	605	GOL	2	0
2	A	603	SO4	1	0
2	A	602	SO4	3	0
2	B	601	SO4	3	0

5.7 Other polymers (i)

There are no such residues in this entry.

5.8 Polymer linkage issues (i)

There are no chain breaks in this entry.

6 Fit of model and data (i)

6.1 Protein, DNA and RNA chains (i)

In the following table, the column labelled '#RSRZ> 2' contains the number (and percentage) of RSRZ outliers, followed by percent RSRZ outliers for the chain as percentile scores relative to all X-ray entries and entries of similar resolution. The OWAB column contains the minimum, median, 95th percentile and maximum values of the occupancy-weighted average B-factor per residue. The column labelled 'Q< 0.9' lists the number of (and percentage) of residues with an average occupancy less than 0.9.

Mol	Chain	Analysed	<RSRZ>	#RSRZ>2			OWAB(Å^2)	Q<0.9
1	A	560/585 (95%)	-0.23	3 (0%)	91	91	23, 42, 76, 118	0
1	B	551/585 (94%)	0.27	37 (6%)	17	18	26, 67, 121, 175	0
All	All	1111/1170 (94%)	0.02	40 (3%)	42	46	23, 53, 108, 175	0

All (40) RSRZ outliers are listed below:

Mol	Chain	Res	Type	RSRZ
1	B	461	ALA	6.7
1	B	44	ILE	5.2
1	B	460	SER	4.8
1	B	459	PHE	4.6
1	B	260	HIS	4.3
1	B	466	TYR	3.9
1	B	557	ALA	3.8
1	B	158	ALA	3.6
1	B	5	VAL	3.6
1	B	464	LYS	3.4
1	B	39	PHE	3.3
1	B	543	ALA	3.3
1	B	268	TYR	3.3
1	B	7	VAL	3.2
1	B	127	PHE	3.2
1	B	35	TYR	3.2
1	B	42	SER	2.9
1	B	145	ASP	2.8
1	B	50	ALA	2.7
1	B	465	VAL	2.6
1	B	539	LEU	2.6
1	B	264	PRO	2.6
1	B	124	ASN	2.6
1	B	527	LYS	2.6

Continued on next page...

Continued from previous page...

Mol	Chain	Res	Type	RSRZ
1	B	269	ALA	2.5
1	B	301	GLY	2.4
1	B	471	ALA	2.3
1	B	528	ILE	2.3
1	B	257	PHE	2.3
1	B	33	ALA	2.3
1	B	425	PHE	2.3
1	A	50	ALA	2.2
1	A	147	ILE	2.2
1	A	40	ILE	2.2
1	B	29	PHE	2.1
1	B	463	ASP	2.1
1	B	261	HIS	2.1
1	B	278	SER	2.1
1	B	263	GLY	2.1
1	B	454	PHE	2.0

6.2 Non-standard residues in protein, DNA, RNA chains (i)

In the following table, the Atoms column lists the number of modelled atoms in the group and the number defined in the chemical component dictionary. The B-factors column lists the minimum, median, 95th percentile and maximum values of B factors of atoms in the group. The column labelled 'Q< 0.9' lists the number of atoms with occupancy less than 0.9.

Mol	Type	Chain	Res	Atoms	RSCC	RSR	B-factors(Å^2)	Q<0.9
1	SEP	B	117	10/11	0.96	0.12	33,65,70,74	0
1	SEP	A	117	10/11	0.98	0.10	36,42,48,59	0

6.3 Carbohydrates (i)

There are no monosaccharides in this entry.

6.4 Ligands (i)

In the following table, the Atoms column lists the number of modelled atoms in the group and the number defined in the chemical component dictionary. The B-factors column lists the minimum, median, 95th percentile and maximum values of B factors of atoms in the group. The column labelled 'Q< 0.9' lists the number of atoms with occupancy less than 0.9.

Mol	Type	Chain	Res	Atoms	RSCC	RSR	B-factors(Å^2)	Q<0.9
4	GOL	A	605	6/6	0.83	0.17	59,61,63,65	0
2	SO4	A	603	5/5	0.86	0.18	49,60,65,66	5
2	SO4	B	601	5/5	0.93	0.18	103,103,111,112	0
3	CA	B	602	1/1	0.95	0.11	39,39,39,39	0
2	SO4	A	601	5/5	0.96	0.11	51,59,65,65	5
2	SO4	A	602	5/5	0.98	0.16	52,53,62,64	0
3	CA	A	604	1/1	0.99	0.10	25,25,25,25	0

6.5 Other polymers (i)

There are no such residues in this entry.