Full wwPDB X-ray Structure Validation Report (i)

Sep 23, 2023 – 06:49 PM EDT

PDB ID	:	5SW8
Title	:	Crystal structure of PI3Kalpha in complex with fragments 7 and 11
Authors	:	Gabelli, S.B.; Vogelstein, B.; Miller, M.S.; Amzel, L.M.
Deposited on	:	2016-08-08
Resolution	:	3.30 Å(reported)

This is a Full wwPDB X-ray Structure Validation Report for a publicly released PDB entry.

We welcome your comments at *validation@mail.wwpdb.org*
A user guide is available at
https://www.wwpdb.org/validation/2017/XrayValidationReportHelp
with specific help available everywhere you see the (i) symbol.

The types of validation reports are described at
http://www.wwpdb.org/validation/2017/FAQs#types.

The following versions of software and data (see references (i)) were used in the production of this report:

MolProbity	:	4.02b-467
Mogul	:	1.8.5 (274361), CSD as541be (2020)
Xtriage (Phenix)	:	1.13
EDS	:	2.35.1
Percentile statistics	:	20191225.v01 (using entries in the PDB archive December 25th 2019)
Refmac	:	5.8.0158
CCP4	:	7.0.044 (Gargrove)
Ideal geometry (proteins)	:	Engh & Huber (2001)
Ideal geometry (DNA, RNA)	:	Parkinson et al. (1996)
Validation Pipeline (wwPDB-VP)	:	2.35.1

1 Overall quality at a glance (i)

The following experimental techniques were used to determine the structure:
X-RAY DIFFRACTION

The reported resolution of this entry is 3.30 Å.

Percentile scores (ranging between 0-100) for global validation metrics of the entry are shown in the following graphic. The table shows the number of entries on which the scores are based.

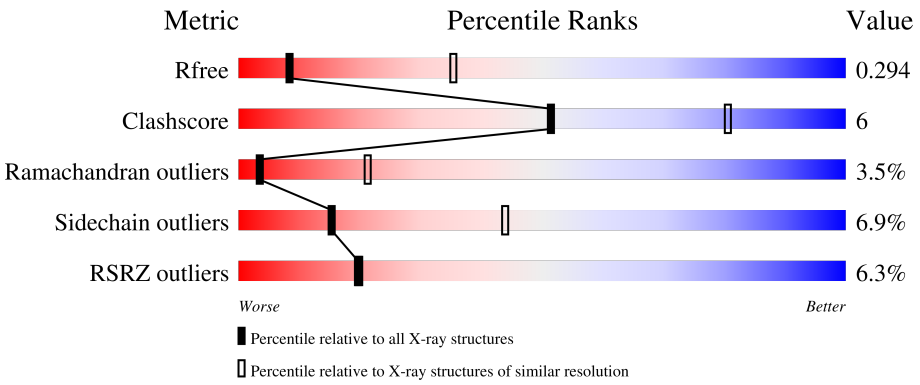

Metric	Whole archive (#Entries)	Similar resolution (#Entries, resolution range(Å))
R_{free}	130704	1149 (3.34-3.26)
Clashscore	141614	1205 (3.34-3.26)
Ramachandran outliers	138981	1183 (3.34-3.26)
Sidechain outliers	138945	1182 (3.34-3.26)
RSRZ outliers	127900	1115 (3.34-3.26)

The table below summarises the geometric issues observed across the polymeric chains and their fit to the electron density. The red, orange, yellow and green segments of the lower bar indicate the fraction of residues that contain outliers for >=3, 2, 1 and 0 types of geometric quality criteria respectively. A grey segment represents the fraction of residues that are not modelled. The numeric value for each fraction is indicated below the corresponding segment, with a dot representing fractions <=5% The upper red bar (where present) indicates the fraction of residues that have poor fit to the electron density. The numeric value is given above the bar.

Mol	Chain	Length	Quality of chain
1	A	1096	4% 72% 20% • 6%
2	B	279	14% 57% 13% • 28%

The following table lists non-polymeric compounds, carbohydrate monomers and non-standard residues in protein, DNA, RNA chains that are outliers for geometric or electron-density-fit criteria:

Mol	Type	Chain	Res	Chirality	Geometry	Clashes	Electron density
5	FB1	A	1104	-	-	-	X

2 Entry composition (i)

There are 5 unique types of molecules in this entry. The entry contains 10223 atoms, of which 0 are hydrogens and 0 are deuteriums.

In the tables below, the ZeroOcc column contains the number of atoms modelled with zero occupancy, the AltConf column contains the number of residues with at least one atom in alternate conformation and the Trace column contains the number of residues modelled with at most 2 atoms.

- Molecule 1 is a protein called Phosphatidylinositol 4,5-bisphosphate 3-kinase catalytic subunit alpha isoform.

Mol	Chain	Residues	Atoms						ZeroOcc	AltConf	Trace
			Total	C	N	O	P	S			
1	A	1031	8437	5394	1442	1531	1	69	0	0	0

There are 28 discrepancies between the modelled and reference sequences:

Chain	Residue	Modelled	Actual	Comment	Reference
A	-27	MET	-	initiating methionine	UNP P42336
A	-26	SER	-	expression tag	UNP P42336
A	-25	TYR	-	expression tag	UNP P42336
A	-24	TYR	-	expression tag	UNP P42336
A	-23	HIS	-	expression tag	UNP P42336
A	-22	HIS	-	expression tag	UNP P42336
A	-21	HIS	-	expression tag	UNP P42336
A	-20	HIS	-	expression tag	UNP P42336
A	-19	HIS	-	expression tag	UNP P42336
A	-18	HIS	-	expression tag	UNP P42336
A	-17	ASP	-	expression tag	UNP P42336
A	-16	TYR	-	expression tag	UNP P42336
A	-15	ASP	-	expression tag	UNP P42336
A	-14	ILE	-	expression tag	UNP P42336
A	-13	PRO	-	expression tag	UNP P42336
A	-12	THR	-	expression tag	UNP P42336
A	-11	THR	-	expression tag	UNP P42336
A	-10	GLU	-	expression tag	UNP P42336
A	-9	ASN	-	expression tag	UNP P42336
A	-8	LEU	-	expression tag	UNP P42336
A	-7	TYR	-	expression tag	UNP P42336
A	-6	PHE	-	expression tag	UNP P42336
A	-5	GLN	-	expression tag	UNP P42336
A	-4	GLY	-	expression tag	UNP P42336
A	-3	ALA	-	expression tag	UNP P42336
A	-2	MET	-	expression tag	UNP P42336

Continued on next page...

Continued from previous page...

Chain	Residue	Modelled	Actual	Comment	Reference
A	-1	GLY	-	expression tag	UNP P42336
A	0	SER	-	expression tag	UNP P42336

- Molecule 2 is a protein called Phosphatidylinositol 3-kinase regulatory subunit alpha.

Mol	Chain	Residues	Atoms					ZeroOcc	AltConf	Trace
			Total	C	N	O	S			
2	B	201	1739	1085	312	337	5	0	0	0

- Molecule 3 is 4-(2-HYDROXYETHYL)-1-PIPERAZINE ETHANESULFONIC ACID (three-letter code: EPE) (formula: $C_8H_{18}N_2O_4S$).

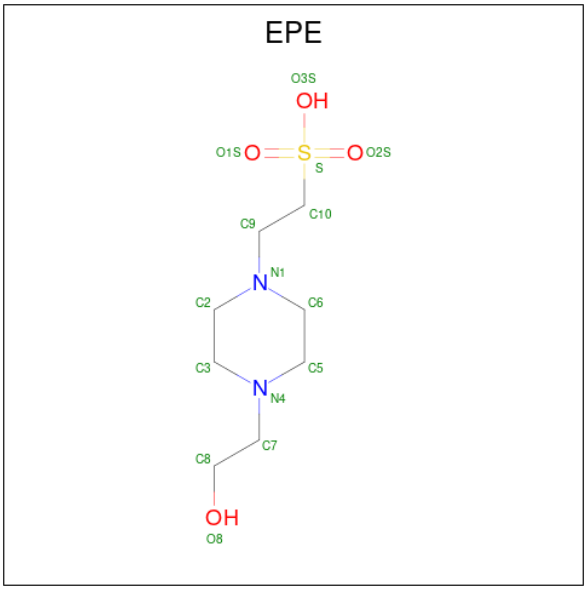

Mol	Chain	Residues	Atoms					ZeroOcc	AltConf
			Total	C	N	O	S		
3	A	1	15	8	2	4	1	0	0

- Molecule 4 is 2H-indazol-5-amine (three-letter code: 70S) (formula: $C_7H_7N_3$).

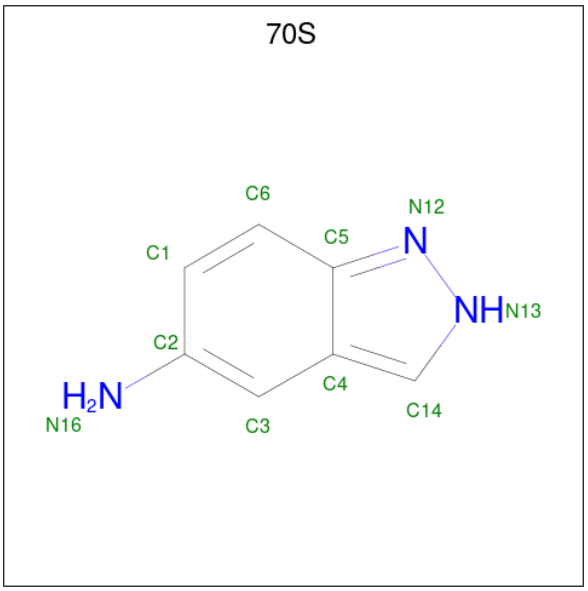

Mol	Chain	Residues	Atoms			ZeroOcc	AltConf
			Total	C	N		
4	A	1	10	7	3	0	0

- Molecule 5 is 2-CHLOROBENZENESULFONAMIDE (three-letter code: FB1) (formula: $C_6H_6ClNO_2S$).

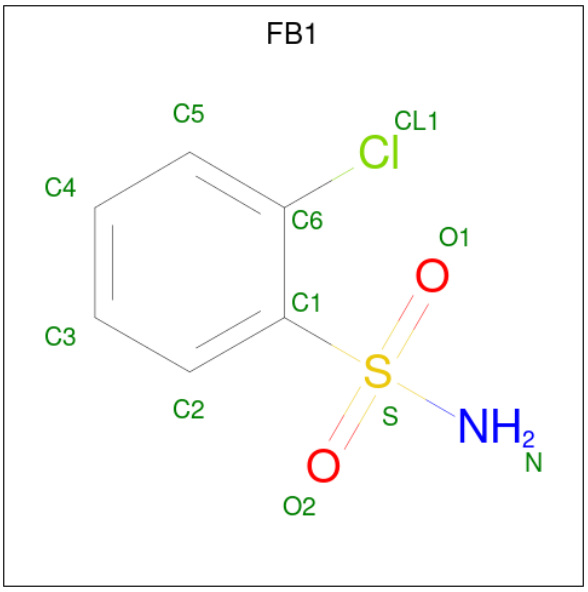

Mol	Chain	Residues	Atoms						ZeroOcc	AltConf
			Total	C	Cl	N	O	S		
5	A	1	11	6	1	1	2	1	0	0
			Total	C	Cl	N	O	S		
5	A	1	11	6	1	1	2	1	0	0

3 Residue-property plots (i)

These plots are drawn for all protein, RNA, DNA and oligosaccharide chains in the entry. The first graphic for a chain summarises the proportions of the various outlier classes displayed in the second graphic. The second graphic shows the sequence view annotated by issues in geometry and electron density. Residues are color-coded according to the number of geometric quality criteria for which they contain at least one outlier: green = 0, yellow = 1, orange = 2 and red = 3 or more. A red dot above a residue indicates a poor fit to the electron density (RSRZ > 2). Stretches of 2 or more consecutive residues without any outlier are shown as a green connector. Residues present in the sample, but not in the model, are shown in grey.

• Molecule 1: Phosphatidylinositol 4,5-bisphosphate 3-kinase catalytic subunit alpha isoform

Chain A: 4% 72% 20% • 6%

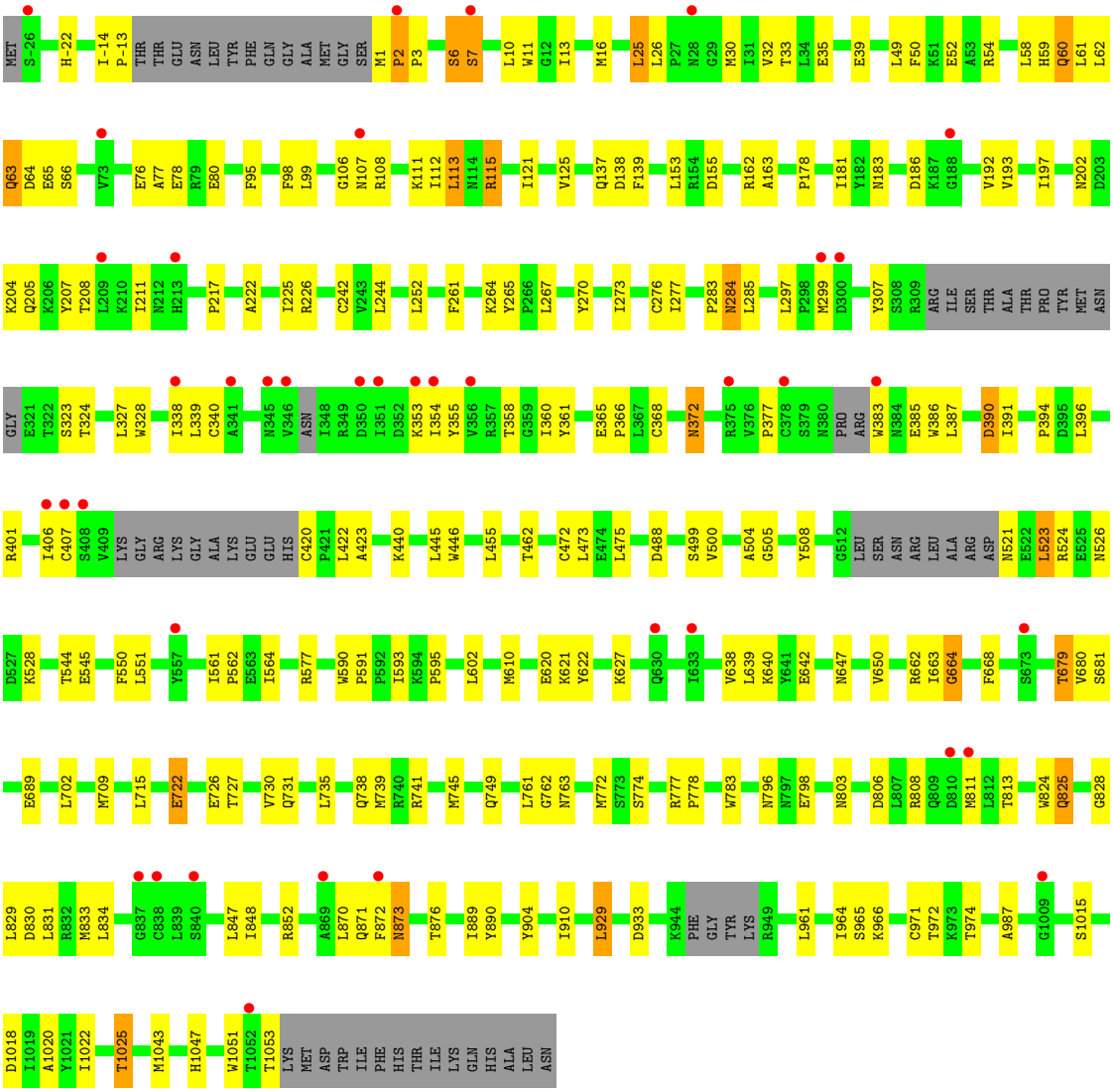

• Molecule 2: Phosphatidylinositol 3-kinase regulatory subunit alpha

Chain B:

14%
57%
13%
28%

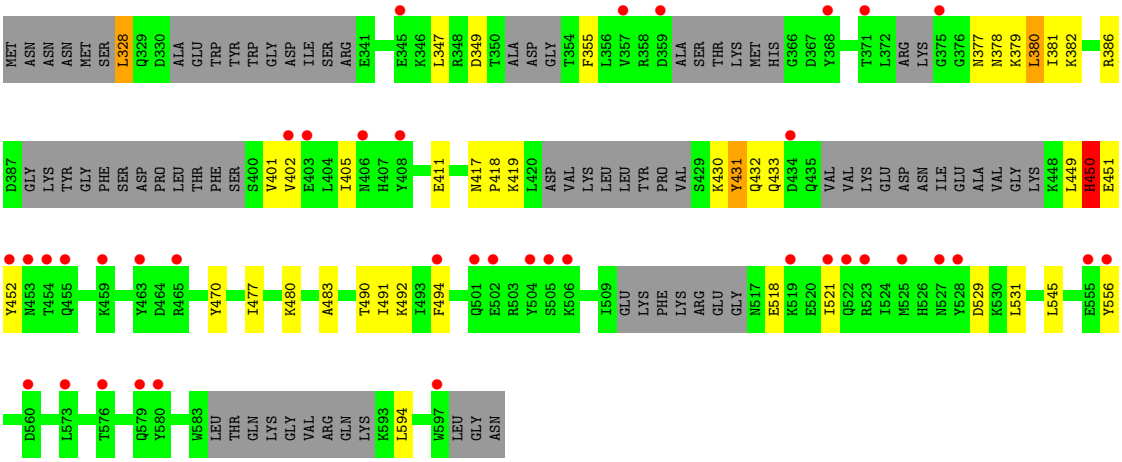
MET ASN ASN ASN MET SER L328 Q329 D330 ALA GLU TRP TYR TRP GLY ASP ILE SER ARG E341 E345 K346 L347 R348 D349 T350 ALA ASP GLY T354 F355 L356 V357 R358 D359 ALA SER THR LYS MET HIS G366 D367 Y368 T371 L372 ARG LYS G375 G376 N377 N378 K379 L380 I381 K382 R386
D387 GLY LYS TYR GLY PHE SER ASP PRO LEU THR PHE SER S400 V401 V402 E403 L404 I405 N406 H407 Y408 E411 N417 P418 K419 L420 ASP VAL LYS LEU LEU TYR PRO VAL S429 K430 Y431 Q432 Q433 D434 Q435 VAL VAL LYS GLU ASP ASN ILE GLU ALA VAL GLY LYS K448 L449 H450 E451
Y452 N453 T454 Q455 K459 Y463 D464 R465 Y470 I477 K480 A483 T490 I491 K492 I493 F494 Q501 E502 R503 Y504 S505 K506 I509 GLU LYS PHE LYS ARG GLU GLY N517 E518 K519 E520 I521 Q522 R523 I524 M525 H526 N527 Y528 D529 K530 L531 L545 E555 Y556
D560 L573 T576 Q579 Y580 W583 LEU THR GLN LYS GLY VAL ARG GLN LYS K593 L594 W597 LEU GLY ASN

4 Data and refinement statistics (i)

Property	Value	Source
Space group	P 21 21 21	Depositor
Cell constants a, b, c, α, β, γ	115.65Å 117.82Å 152.51Å 90.00° 90.00° 90.00°	Depositor
Resolution (Å)	93.24 – 3.30 49.63 – 3.30	Depositor EDS
% Data completeness (in resolution range)	98.9 (93.24-3.30) 99.0 (49.63-3.30)	Depositor EDS
R_{merge}	0.10	Depositor
R_{sym}	(Not available)	Depositor
$< I/\sigma(I) >$ [1]	2.72 (at 3.33Å)	Xtriage
Refinement program	REFMAC 5.8.0135	Depositor
R, R_{free}	0.226 , 0.298 0.225 , 0.294	Depositor DCC
R_{free} test set	1561 reflections (4.93%)	wwPDB-VP
Wilson B-factor (Å^2)	98.9	Xtriage
Anisotropy	0.492	Xtriage
Bulk solvent k_{sol}(e/Å^3), B_{sol}(Å^2)	0.29 , 82.0	EDS
L-test for twinning[2]	$< \|L\| > = 0.51$, $< L^2 > = 0.35$	Xtriage
Estimated twinning fraction	0.000 for k,h,-l	Xtriage
F_o,F_c correlation	0.93	EDS
Total number of atoms	10223	wwPDB-VP
Average B, all atoms (Å^2)	124.0	wwPDB-VP

Xtriage's analysis on translational NCS is as follows: *The largest off-origin peak in the Patterson function is 3.17% of the height of the origin peak. No significant pseudotranslation is detected.*

[1]Intensities estimated from amplitudes.

[2]Theoretical values of $< |L| >$, $< L^2 >$ for acentric reflections are 0.5, 0.333 respectively for untwinned datasets, and 0.375, 0.2 for perfectly twinned datasets.

5 Model quality (i)

5.1 Standard geometry (i)

Bond lengths and bond angles in the following residue types are not validated in this section: 70S, FB1, EPE, SEP

The Z score for a bond length (or angle) is the number of standard deviations the observed value is removed from the expected value. A bond length (or angle) with $|Z| > 5$ is considered an outlier worth inspection. RMSZ is the root-mean-square of all Z scores of the bond lengths (or angles).

Mol	Chain	Bond lengths		Bond angles	
		RMSZ	$\#\|Z\| >5$	RMSZ	$\#\|Z\| >5$
1	A	0.57	0/8619	0.81	2/11646 (0.0%)
2	B	0.56	0/1757	0.79	1/2338 (0.0%)
All	All	0.57	0/10376	0.81	3/13984 (0.0%)

Chiral center outliers are detected by calculating the chiral volume of a chiral center and verifying if the center is modelled as a planar moiety or with the opposite hand.A planarity outlier is detected by checking planarity of atoms in a peptide group, atoms in a mainchain group or atoms of a sidechain that are expected to be planar.

Mol	Chain	#Chirality outliers	#Planarity outliers
1	A	0	2

There are no bond length outliers.

All (3) bond angle outliers are listed below:

Mol	Chain	Res	Type	Atoms	Z	Observed(^{o})	Ideal(^{o})
2	B	328	LEU	CA-CB-CG	5.93	128.93	115.30
1	A	2	PRO	C-N-CD	-5.92	107.59	120.60
1	A	162	ARG	NE-CZ-NH1	5.12	122.86	120.30

There are no chirality outliers.

All (2) planarity outliers are listed below:

Mol	Chain	Res	Type	Group
1	A	113	LEU	Peptide
1	A	526	ASN	Peptide

5.2 Too-close contacts (i)

In the following table, the Non-H and H(model) columns list the number of non-hydrogen atoms and hydrogen atoms in the chain respectively. The H(added) column lists the number of hydrogen atoms added and optimized by MolProbity. The Clashes column lists the number of clashes within the asymmetric unit, whereas Symm-Clashes lists symmetry-related clashes.

Mol	Chain	Non-H	H(model)	H(added)	Clashes	Symm-Clashes
1	A	8437	0	8413	104	0
2	B	1739	0	1706	15	0
3	A	15	0	18	0	0
4	A	10	0	0	0	0
5	A	22	0	12	0	0
All	All	10223	0	10149	114	0

The all-atom clashscore is defined as the number of clashes found per 1000 atoms (including hydrogen atoms). The all-atom clashscore for this structure is 6.

All (114) close contacts within the same asymmetric unit are listed below, sorted by their clash magnitude.

Atom-1	Atom-2	Interatomic distance (Å)	Clash overlap (Å)
1:A:192:VAL:HG12	1:A:193:VAL:N	2.04	0.73
1:A:749:GLN:O	1:A:762:GLY:HA2	1.91	0.70
1:A:731:GLN:HE22	1:A:777:ARG:HE	1.39	0.68
1:A:361:TYR:HA	1:A:366:PRO:HD3	1.78	0.65
1:A:25:LEU:HD21	2:B:494:PHE:CE1	2.32	0.64
1:A:106:GLY:O	1:A:108:ARG:N	2.30	0.64
1:A:640:LYS:HE2	1:A:680:VAL:HG11	1.81	0.62
1:A:108:ARG:HG3	1:A:111:LYS:HB2	1.82	0.62
1:A:6:SER:OG	1:A:7:SER:N	2.34	0.59
1:A:639:LEU:HD22	1:A:650:VAL:HG22	1.85	0.58
1:A:391:ILE:HD13	1:A:396:LEU:HD23	1.87	0.57
1:A:961:LEU:HA	1:A:964:ILE:HD12	1.86	0.57
1:A:98:PHE:CE2	2:B:490:THR:HG23	2.40	0.56
1:A:1:MET:H2	1:A:2:PRO:HA	1.72	0.55
1:A:328:TRP:CE2	1:A:577:ARG:HD2	2.42	0.55
1:A:551:LEU:HD21	1:A:564:ILE:HD11	1.90	0.53
2:B:477:ILE:HD11	2:B:556:TYR:HB2	1.91	0.53
1:A:192:VAL:CG1	1:A:193:VAL:N	2.71	0.53
1:A:749:GLN:HE21	1:A:763:ASN:HA	1.72	0.53
1:A:285:LEU:HD23	1:A:285:LEU:N	2.24	0.53
1:A:217:PRO:HB3	1:A:252:LEU:HD12	1.90	0.53
1:A:1:MET:N	1:A:2:PRO:HA	2.24	0.52

Continued on next page...

Continued from previous page...

Atom-1	Atom-2	Interatomic distance (Å)	Clash overlap (Å)
1:A:446:TRP:CZ3	1:A:679:THR:HG22	2.45	0.52
1:A:25:LEU:HD12	1:A:25:LEU:N	2.24	0.52
1:A:283:PRO:C	1:A:284:ASN:HD22	2.12	0.52
1:A:32:VAL:HG21	1:A:49:LEU:CD1	2.40	0.52
1:A:205:GLN:NE2	1:A:207:TYR:OH	2.43	0.52
1:A:323:SER:O	1:A:324:THR:HG23	2.10	0.52
1:A:726:GLU:O	1:A:730:VAL:HB	2.09	0.52
1:A:965:SER:HB2	1:A:974:THR:HG21	1.92	0.52
1:A:181:ILE:HG23	1:A:277:ILE:HG21	1.91	0.52
1:A:338:ILE:HD11	1:A:358:THR:HG21	1.92	0.51
1:A:910:ILE:O	1:A:1025:THR:HG21	2.11	0.51
1:A:163:ALA:HB2	1:A:297:LEU:HD11	1.91	0.51
1:A:871:GLN:HE21	1:A:872:PHE:H	1.59	0.51
1:A:98:PHE:HE2	2:B:490:THR:HG23	1.76	0.51
1:A:353:LYS:HA	1:A:377:PRO:HB3	1.93	0.50
1:A:709:MET:HE1	1:A:847:LEU:HD21	1.93	0.50
1:A:59:HIS:O	1:A:60:GLN:HB3	2.11	0.50
1:A:10:LEU:HD13	1:A:16:MET:CE	2.42	0.50
1:A:738:GLN:HE22	1:A:741:ARG:HH21	1.58	0.50
2:B:518:GLU:HA	2:B:521:ILE:HD12	1.94	0.50
1:A:273:ILE:O	1:A:276:CYS:N	2.45	0.50
1:A:390:ASP:N	1:A:390:ASP:OD1	2.44	0.49
1:A:192:VAL:HG12	1:A:193:VAL:H	1.74	0.49
2:B:491:ILE:O	2:B:494:PHE:N	2.45	0.49
1:A:1043:MET:O	1:A:1047:HIS:ND1	2.42	0.49
1:A:663:ILE:O	1:A:664:GLY:C	2.51	0.48
1:A:261:PHE:HA	1:A:270:TYR:CE2	2.48	0.48
1:A:353:LYS:HA	1:A:377:PRO:CB	2.44	0.48
1:A:715:LEU:HD21	1:A:735:LEU:HD12	1.94	0.48
1:A:26:LEU:CD1	1:A:30:MET:O	2.62	0.47
1:A:1015:SER:OG	1:A:1018:ASP:N	2.48	0.47
1:A:-14:ILE:HD12	1:A:-13:PRO:N	2.30	0.47
1:A:327:LEU:HD13	1:A:394:PRO:HA	1.96	0.47
1:A:545:GLU:CG	2:B:379:LYS:HG2	2.45	0.47
1:A:735:LEU:O	1:A:739:MET:HG3	2.15	0.47
1:A:521:ASN:HD22	1:A:523:LEU:HD21	1.79	0.47
1:A:621:LYS:HB3	1:A:622:TYR:CE1	2.50	0.47
1:A:407:CYS:SG	1:A:455:LEU:HD22	2.55	0.46
1:A:561:ILE:O	1:A:564:ILE:HG22	2.14	0.46
2:B:450:HIS:O	2:B:452:TYR:N	2.48	0.46
1:A:872:PHE:O	1:A:873:ASN:CB	2.64	0.46

Continued on next page...

Continued from previous page...

Atom-1	Atom-2	Interatomic distance (Å)	Clash overlap (Å)
1:A:192:VAL:HG21	1:A:211:ILE:HD11	1.98	0.46
1:A:50:PHE:CD2	1:A:65:GLU:HB3	2.52	0.45
1:A:11:TRP:HB2	1:A:95:PHE:CD1	2.51	0.45
1:A:749:GLN:NE2	1:A:763:ASN:HA	2.32	0.45
2:B:480:LYS:HG2	2:B:545:LEU:HD11	1.97	0.45
2:B:402:VAL:HA	2:B:405:ILE:HD12	1.98	0.45
1:A:121:ILE:HD11	1:A:689:GLU:HA	1.98	0.45
1:A:80:GLU:OE2	1:A:115:ARG:NH1	2.51	0.44
1:A:803:ASN:OD1	1:A:803:ASN:C	2.56	0.44
1:A:138:ASP:O	1:A:139:PHE:C	2.56	0.44
1:A:798:GLU:OE1	1:A:852:ARG:NH1	2.51	0.44
1:A:833:MET:HE1	1:A:904:TYR:HA	1.99	0.44
1:A:406:ILE:HG22	1:A:422:LEU:HD12	2.00	0.44
1:A:98:PHE:O	1:A:99:LEU:HD23	2.17	0.44
1:A:284:ASN:HD22	1:A:284:ASN:N	2.15	0.44
1:A:590:TRP:CD1	1:A:591:PRO:HD2	2.53	0.43
2:B:480:LYS:O	2:B:483:ALA:N	2.51	0.43
1:A:423:ALA:O	1:A:445:LEU:HD13	2.18	0.43
1:A:10:LEU:HD13	1:A:16:MET:HE2	2.00	0.43
1:A:265:TYR:HB2	1:A:270:TYR:CE1	2.54	0.43
1:A:602:LEU:HB3	1:A:638:VAL:HG11	2.01	0.43
1:A:59:HIS:CD2	1:A:62:LEU:HD12	2.53	0.42
1:A:32:VAL:HG21	1:A:49:LEU:HD11	2.01	0.42
1:A:544:THR:HG22	2:B:380:LEU:HD13	2.02	0.42
1:A:745:MET:O	1:A:749:GLN:HB2	2.19	0.42
1:A:761:LEU:HD23	1:A:783:TRP:CE2	2.55	0.42
1:A:354:ILE:HD12	1:A:354:ILE:O	2.19	0.42
1:A:360:ILE:O	1:A:366:PRO:HD2	2.19	0.42
1:A:668:PHE:CD2	1:A:702:LEU:HD13	2.54	0.42
2:B:433:GLN:N	2:B:433:GLN:OE1	2.53	0.42
1:A:806:ASP:OD1	1:A:808:ARG:HG2	2.20	0.42
1:A:339:LEU:HD12	1:A:339:LEU:N	2.35	0.42
1:A:777:ARG:N	1:A:778:PRO:CD	2.83	0.42
1:A:440:LYS:HA	1:A:475:LEU:O	2.20	0.42
1:A:178:PRO:HB2	1:A:181:ILE:HD12	2.01	0.41
1:A:222:ALA:O	1:A:225:ILE:N	2.53	0.41
1:A:889:ILE:O	1:A:890:TYR:C	2.58	0.41
1:A:125:VAL:HG13	1:A:689:GLU:OE2	2.20	0.41
1:A:824:TRP:O	1:A:825:GLN:C	2.58	0.41
1:A:831:LEU:HD11	1:A:987:ALA:HB2	2.02	0.41
1:A:929:LEU:C	1:A:929:LEU:HD23	2.41	0.41

Continued on next page...

Continued from previous page...

Atom-1	Atom-2	Interatomic distance (Å)	Clash overlap (Å)
1:A:355:TYR:HA	1:A:383:TRP:HZ2	1.85	0.41
2:B:417:ASN:HB3	2:B:418:PRO:HD3	2.03	0.41
1:A:197:ILE:HG22	1:A:204:LYS:HG2	2.03	0.41
1:A:76:GLU:O	1:A:78:GLU:N	2.52	0.41
1:A:472:CYS:SG	1:A:473:LEU:N	2.94	0.41
1:A:562:PRO:HB2	1:A:593:ILE:HG22	2.02	0.41
2:B:470:TYR:CE1	2:B:556:TYR:CE1	3.10	0.40
1:A:642:GLU:HG2	1:A:647:ASN:CG	2.42	0.40
1:A:910:ILE:HA	1:A:1025:THR:CG2	2.52	0.40
1:A:-14:ILE:N	1:A:-13:PRO:HD2	2.36	0.40

There are no symmetry-related clashes.

5.3 Torsion angles (i)

5.3.1 Protein backbone (i)

In the following table, the Percentiles column shows the percent Ramachandran outliers of the chain as a percentile score with respect to all X-ray entries followed by that with respect to entries of similar resolution.

The Analysed column shows the number of residues for which the backbone conformation was analysed, and the total number of residues.

Mol	Chain	Analysed	Favoured	Allowed	Outliers	Percentiles
1	A	1014/1096 (92%)	862 (85%)	118 (12%)	34 (3%)	3 22
2	B	181/279 (65%)	145 (80%)	28 (16%)	8 (4%)	2 16
All	All	1195/1375 (87%)	1007 (84%)	146 (12%)	42 (4%)	3 21

All (42) Ramachandran outliers are listed below:

Mol	Chain	Res	Type
1	A	3	PRO
1	A	6	SER
1	A	7	SER
1	A	66	SER
1	A	77	ALA
1	A	107	ASN
1	A	524	ARG
1	A	528	LYS

Continued on next page...

Continued from previous page...

Mol	Chain	Res	Type
1	A	681	SER
1	A	873	ASN
1	A	966	LYS
2	B	431	TYR
1	A	54	ARG
1	A	183	ASN
1	A	307	TYR
1	A	722	GLU
1	A	830	ASP
1	A	1051	TRP
2	B	377	ASN
2	B	450	HIS
2	B	451	GLU
1	A	60	GLN
1	A	63	GLN
1	A	202	ASN
1	A	264	LYS
1	A	372	ASN
2	B	401	VAL
2	B	432	GLN
2	B	492	LYS
2	B	594	LEU
1	A	-22	HIS
1	A	504	ALA
1	A	727	THR
1	A	933	ASP
1	A	1020	ALA
1	A	828	GLY
1	A	267	LEU
1	A	368	CYS
1	A	772	MET
1	A	505	GLY
1	A	595	PRO
1	A	664	GLY

5.3.2 Protein sidechains (i)

In the following table, the Percentiles column shows the percent sidechain outliers of the chain as a percentile score with respect to all X-ray entries followed by that with respect to entries of similar resolution.

The Analysed column shows the number of residues for which the sidechain conformation was analysed, and the total number of residues.

Mol	Chain	Analysed	Rotameric	Outliers	Percentiles
1	A	944/998 (95%)	883 (94%)	61 (6%)	17 46
2	B	192/259 (74%)	175 (91%)	17 (9%)	9 32
All	All	1136/1257 (90%)	1058 (93%)	78 (7%)	15 44

All (78) residues with a non-rotameric sidechain are listed below:

Mol	Chain	Res	Type
1	A	13	ILE
1	A	25	LEU
1	A	33	THR
1	A	35	GLU
1	A	39	GLU
1	A	52	GLU
1	A	58	LEU
1	A	61	LEU
1	A	63	GLN
1	A	64	ASP
1	A	112	ILE
1	A	113	LEU
1	A	115	ARG
1	A	137	GLN
1	A	153	LEU
1	A	155	ASP
1	A	186	ASP
1	A	208	THR
1	A	226	ARG
1	A	242	CYS
1	A	244	LEU
1	A	284	ASN
1	A	299	MET
1	A	340	CYS
1	A	365	GLU
1	A	372	ASN
1	A	385	GLU
1	A	386	TRP
1	A	387	LEU
1	A	390	ASP
1	A	401	ARG
1	A	420	CYS
1	A	462	THR
1	A	488	ASP
1	A	499	SER

Continued on next page...

Continued from previous page...

Mol	Chain	Res	Type
1	A	500	VAL
1	A	508	TYR
1	A	523	LEU
1	A	550	PHE
1	A	610	MET
1	A	620	GLU
1	A	627	LYS
1	A	662	ARG
1	A	679	THR
1	A	722	GLU
1	A	774	SER
1	A	796	ASN
1	A	811	MET
1	A	813	THR
1	A	825	GLN
1	A	829	LEU
1	A	834	LEU
1	A	848	ILE
1	A	870	LEU
1	A	876	THR
1	A	929	LEU
1	A	971	CYS
1	A	972	THR
1	A	1022	ILE
1	A	1025	THR
1	A	1053	THR
2	B	328	LEU
2	B	347	LEU
2	B	349	ASP
2	B	355	PHE
2	B	378	ASN
2	B	380	LEU
2	B	381	ILE
2	B	382	LYS
2	B	386	ARG
2	B	411	GLU
2	B	419	LYS
2	B	430	LYS
2	B	431	TYR
2	B	449	LEU
2	B	450	HIS
2	B	529	ASP

Continued on next page...

Continued from previous page...

Mol	Chain	Res	Type
2	B	531	LEU

Sometimes sidechains can be flipped to improve hydrogen bonding and reduce clashes. All (14) such sidechains are listed below:

Mol	Chain	Res	Type
1	A	137	GLN
1	A	205	GLN
1	A	238	GLN
1	A	444	ASN
1	A	521	ASN
1	A	605	ASN
1	A	728	GLN
1	A	731	GLN
1	A	738	GLN
1	A	749	GLN
1	A	855	HIS
1	A	871	GLN
1	A	996	ASN
1	A	1042	GLN

5.3.3 RNA (i)

There are no RNA molecules in this entry.

5.4 Non-standard residues in protein, DNA, RNA chains (i)

1 non-standard protein/DNA/RNA residue is modelled in this entry.

In the following table, the Counts columns list the number of bonds (or angles) for which Mogul statistics could be retrieved, the number of bonds (or angles) that are observed in the model and the number of bonds (or angles) that are defined in the Chemical Component Dictionary. The Link column lists molecule types, if any, to which the group is linked. The Z score for a bond length (or angle) is the number of standard deviations the observed value is removed from the expected value. A bond length (or angle) with $|Z| > 2$ is considered an outlier worth inspection. RMSZ is the root-mean-square of all Z scores of the bond lengths (or angles).

Mol	Type	Chain	Res	Link	Bond lengths			Bond angles		
					Counts	RMSZ	$\#\|Z\| > 2$	Counts	RMSZ	$\#\|Z\| > 2$
1	SEP	A	790	1	8,9,10	0.60	0	8,12,14	1.18	0

In the following table, the Chirals column lists the number of chiral outliers, the number of chiral

centers analysed, the number of these observed in the model and the number defined in the Chemical Component Dictionary. Similar counts are reported in the Torsion and Rings columns. '-' means no outliers of that kind were identified.

Mol	Type	Chain	Res	Link	Chirals	Torsions	Rings
1	SEP	A	790	1	-	0/5/8/10	-

There are no bond length outliers.

There are no bond angle outliers.

There are no chirality outliers.

There are no torsion outliers.

There are no ring outliers.

No monomer is involved in short contacts.

5.5 Carbohydrates (i)

There are no monosaccharides in this entry.

5.6 Ligand geometry (i)

4 ligands are modelled in this entry.

In the following table, the Counts columns list the number of bonds (or angles) for which Mogul statistics could be retrieved, the number of bonds (or angles) that are observed in the model and the number of bonds (or angles) that are defined in the Chemical Component Dictionary. The Link column lists molecule types, if any, to which the group is linked. The Z score for a bond length (or angle) is the number of standard deviations the observed value is removed from the expected value. A bond length (or angle) with $|Z| > 2$ is considered an outlier worth inspection. RMSZ is the root-mean-square of all Z scores of the bond lengths (or angles).

Mol	Type	Chain	Res	Link	Bond lengths			Bond angles		
					Counts	RMSZ	$\#\|Z\| > 2$	Counts	RMSZ	$\#\|Z\| > 2$
5	FB1	A	1103	-	11,11,11	4.14	5 (45%)	16,16,16	2.32	4 (25%)
5	FB1	A	1104	-	11,11,11	4.37	5 (45%)	16,16,16	1.95	3 (18%)
3	EPE	A	1101	-	15,15,15	2.04	1 (6%)	18,20,20	1.13	3 (16%)
4	70S	A	1102	-	9,11,11	1.21	1 (11%)	10,15,15	1.61	3 (30%)

In the following table, the Chirals column lists the number of chiral outliers, the number of chiral centers analysed, the number of these observed in the model and the number defined in the Chemical Component Dictionary. Similar counts are reported in the Torsion and Rings columns. '-' means no outliers of that kind were identified.

Mol	Type	Chain	Res	Link	Chirals	Torsions	Rings
4	70S	A	1102	-	-	-	0/2/2/2
5	FB1	A	1103	-	-	0/6/6/6	0/1/1/1
3	EPE	A	1101	-	-	1/9/19/19	0/1/1/1
5	FB1	A	1104	-	-	0/6/6/6	0/1/1/1

All (12) bond length outliers are listed below:

Mol	Chain	Res	Type	Atoms	Z	Observed(Å)	Ideal(Å)
5	A	1104	FB1	C1-S	-12.85	1.61	1.77
5	A	1103	FB1	C1-S	-12.09	1.62	1.77
3	A	1101	EPE	C10-S	-7.54	1.66	1.77
5	A	1103	FB1	S-N	-3.87	1.52	1.60
5	A	1104	FB1	S-N	-3.85	1.52	1.60
5	A	1104	FB1	C6-CL1	3.28	1.81	1.73
5	A	1103	FB1	O1-S	2.82	1.49	1.43
5	A	1103	FB1	C6-CL1	2.73	1.80	1.73
5	A	1104	FB1	O1-S	2.62	1.48	1.43
5	A	1103	FB1	O2-S	2.58	1.48	1.43
4	A	1102	70S	N13-N12	2.54	1.42	1.37
5	A	1104	FB1	O2-S	2.51	1.48	1.43

All (13) bond angle outliers are listed below:

Mol	Chain	Res	Type	Atoms	Z	Observed(^{o})	Ideal(^{o})
5	A	1103	FB1	O2-S-O1	-7.04	107.18	118.76
5	A	1104	FB1	O2-S-O1	-6.11	108.72	118.76
5	A	1103	FB1	C1-C6-CL1	3.06	123.73	121.49
5	A	1103	FB1	O1-S-C1	2.92	111.57	107.29
4	A	1102	70S	C6-C5-N12	2.70	134.59	130.19
4	A	1102	70S	C2-C3-C4	-2.66	119.31	121.11
4	A	1102	70S	C14-C4-C5	2.58	110.13	104.66
5	A	1103	FB1	O2-S-C1	2.43	110.86	107.29
5	A	1104	FB1	O2-S-C1	2.37	110.76	107.29
3	A	1101	EPE	O1S-S-C10	2.33	109.72	106.92
3	A	1101	EPE	O2S-S-C10	2.08	109.42	106.92
5	A	1104	FB1	C1-C6-CL1	2.04	122.98	121.49
3	A	1101	EPE	C9-N1-C2	-2.02	106.08	111.23

There are no chirality outliers.

All (1) torsion outliers are listed below:

Mol	Chain	Res	Type	Atoms
3	A	1101	EPE	N4-C7-C8-O8

There are no ring outliers.

No monomer is involved in short contacts.

5.7 Other polymers (i)

There are no such residues in this entry.

5.8 Polymer linkage issues (i)

There are no chain breaks in this entry.

6 Fit of model and data (i)

6.1 Protein, DNA and RNA chains (i)

In the following table, the column labelled '#RSRZ> 2' contains the number (and percentage) of RSRZ outliers, followed by percent RSRZ outliers for the chain as percentile scores relative to all X-ray entries and entries of similar resolution. The OWAB column contains the minimum, median, 95th percentile and maximum values of the occupancy-weighted average B-factor per residue. The column labelled 'Q< 0.9' lists the number of (and percentage) of residues with an average occupancy less than 0.9.

Mol	Chain	Analysed	<RSRZ>	#RSRZ>2			OWAB(Å^2)	Q<0.9
1	A	1030/1096 (93%)	0.28	39 (3%)	40	37	60, 109, 172, 219	0
2	B	201/279 (72%)	0.95	39 (19%)	1	1	100, 170, 225, 272	0
All	All	1231/1375 (89%)	0.39	78 (6%)	20	20	60, 116, 196, 272	0

All (78) RSRZ outliers are listed below:

Mol	Chain	Res	Type	RSRZ
1	A	557	TYR	6.0
2	B	408	TYR	5.5
1	A	338	ILE	5.1
1	A	353	LYS	4.5
2	B	501	GLN	4.1
2	B	525	MET	4.1
2	B	519	LYS	4.0
2	B	521	ILE	4.0
2	B	505	SER	3.6
1	A	869	ALA	3.6
1	A	350	ASP	3.5
1	A	351	ILE	3.5
1	A	300	ASP	3.5
2	B	573	LEU	3.5
1	A	375	ARG	3.5
1	A	872	PHE	3.5
2	B	371	THR	3.4
1	A	341	ALA	3.3
1	A	346	VAL	3.3
1	A	28	ASN	3.3
1	A	407	CYS	3.3
2	B	580	TYR	3.3
2	B	454	THR	3.2
1	A	-26	SER	3.2

Continued on next page...

Continued from previous page...

Mol	Chain	Res	Type	RSRZ
2	B	357	VAL	3.2
2	B	494	PHE	3.1
2	B	345	GLU	3.0
1	A	810	ASP	2.9
2	B	555	GLU	2.9
1	A	811	MET	2.9
1	A	354	ILE	2.8
1	A	299	MET	2.7
1	A	673	SER	2.7
2	B	556	TYR	2.7
2	B	597	TRP	2.7
2	B	368	TYR	2.7
1	A	378	CYS	2.7
2	B	579	GLN	2.7
1	A	838	CYS	2.7
1	A	383	TRP	2.6
1	A	840	SER	2.6
2	B	560	ASP	2.6
1	A	345	ASN	2.6
1	A	1009	GLY	2.6
2	B	402	VAL	2.5
1	A	356	VAL	2.5
2	B	455	GLN	2.5
1	A	633	ILE	2.5
2	B	576	THR	2.4
1	A	188	GLY	2.4
2	B	527	ASN	2.4
2	B	453	ASN	2.3
2	B	506	LYS	2.3
1	A	213	HIS	2.3
2	B	375	GLY	2.3
2	B	523	ARG	2.3
2	B	522	GLN	2.3
2	B	434	ASP	2.3
2	B	359	ASP	2.3
1	A	209	LEU	2.2
2	B	459	LYS	2.2
2	B	465	ARG	2.2
2	B	403	GLU	2.2
2	B	502	GLU	2.2
2	B	463	TYR	2.2
1	A	7	SER	2.2

Continued on next page...

Continued from previous page...

Mol	Chain	Res	Type	RSRZ
2	B	406	ASN	2.2
1	A	837	GLY	2.2
2	B	452	TYR	2.2
1	A	2	PRO	2.1
1	A	1052	THR	2.1
1	A	408	SER	2.1
2	B	528	TYR	2.1
1	A	107	ASN	2.1
1	A	406	ILE	2.1
1	A	630	GLN	2.1
2	B	504	TYR	2.1
1	A	73	VAL	2.0

6.2 Non-standard residues in protein, DNA, RNA chains (i)

In the following table, the Atoms column lists the number of modelled atoms in the group and the number defined in the chemical component dictionary. The B-factors column lists the minimum, median, 95th percentile and maximum values of B factors of atoms in the group. The column labelled 'Q< 0.9' lists the number of atoms with occupancy less than 0.9.

Mol	Type	Chain	Res	Atoms	RSCC	RSR	B-factors(Å^2)	Q<0.9
1	SEP	A	790	10/11	0.90	0.18	104,109,202,208	0

6.3 Carbohydrates (i)

There are no monosaccharides in this entry.

6.4 Ligands (i)

In the following table, the Atoms column lists the number of modelled atoms in the group and the number defined in the chemical component dictionary. The B-factors column lists the minimum, median, 95th percentile and maximum values of B factors of atoms in the group. The column labelled 'Q< 0.9' lists the number of atoms with occupancy less than 0.9.

Mol	Type	Chain	Res	Atoms	RSCC	RSR	B-factors(Å^2)	Q<0.9
5	FB1	A	1104	11/11	0.69	0.50	183,213,228,231	0
4	70S	A	1102	10/10	0.70	0.24	164,174,177,178	0
3	EPE	A	1101	15/15	0.77	0.32	137,173,220,224	0
5	FB1	A	1103	11/11	0.87	0.20	196,214,220,220	0

6.5 Other polymers (i)

There are no such residues in this entry.