Full wwPDB X-ray Structure Validation Report (i)

Aug 22, 2023 – 03:45 AM EDT

PDB ID	:	2QEQ
Title	:	Crystal structure of kunjin virus ns3 helicase
Authors	:	Milani, M.; Mastrangelo, E.; Bolognesi, M.
Deposited on	:	2007-06-26
Resolution	:	3.10 Å(reported)

This is a Full wwPDB X-ray Structure Validation Report for a publicly released PDB entry.

We welcome your comments at *validation@mail.wwpdb.org*
A user guide is available at
https://www.wwpdb.org/validation/2017/XrayValidationReportHelp
with specific help available everywhere you see the (i) symbol.

The types of validation reports are described at
http://www.wwpdb.org/validation/2017/FAQs#types.

The following versions of software and data (see references (1)) were used in the production of this report:

MolProbity	:	4.02b-467
Xtriage (Phenix)	:	1.13
EDS	:	2.35
Percentile statistics	:	20191225.v01 (using entries in the PDB archive December 25th 2019)
Refmac	:	5.8.0158
CCP4	:	7.0.044 (Gargrove)
Ideal geometry (proteins)	:	Engh & Huber (2001)
Ideal geometry (DNA, RNA)	:	Parkinson et al. (1996)
Validation Pipeline (wwPDB-VP)	:	2.35

1 Overall quality at a glance (i)

The following experimental techniques were used to determine the structure:
X-RAY DIFFRACTION

The reported resolution of this entry is 3.10 Å.

Percentile scores (ranging between 0-100) for global validation metrics of the entry are shown in the following graphic. The table shows the number of entries on which the scores are based.

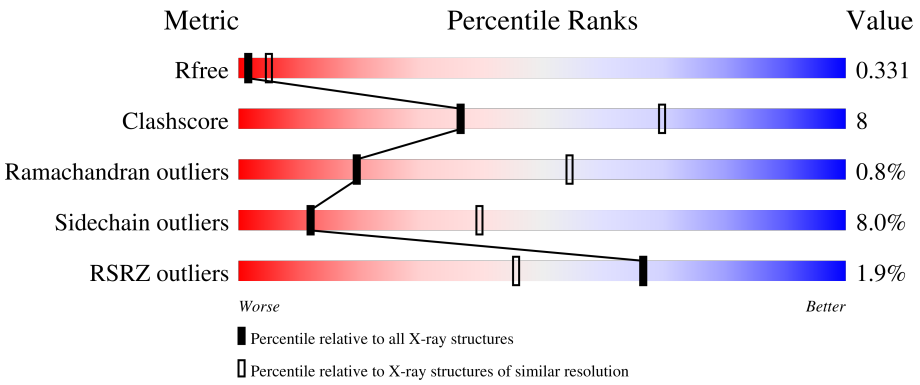

Metric	Whole archive (#Entries)	Similar resolution (#Entries, resolution range(Å))
R_{free}	130704	1094 (3.10-3.10)
Clashscore	141614	1184 (3.10-3.10)
Ramachandran outliers	138981	1141 (3.10-3.10)
Sidechain outliers	138945	1141 (3.10-3.10)
RSRZ outliers	127900	1067 (3.10-3.10)

The table below summarises the geometric issues observed across the polymeric chains and their fit to the electron density. The red, orange, yellow and green segments of the lower bar indicate the fraction of residues that contain outliers for >=3, 2, 1 and 0 types of geometric quality criteria respectively. A grey segment represents the fraction of residues that are not modelled. The numeric value for each fraction is indicated below the corresponding segment, with a dot representing fractions <=5% The upper red bar (where present) indicates the fraction of residues that have poor fit to the electron density. The numeric value is given above the bar.

Mol	Chain	Length	Quality of chain
1	A	434	75% 18% • •
1	B	434	3% 73% 16% • 10%

2 Entry composition (i)

There is only 1 type of molecule in this entry. The entry contains 6398 atoms, of which 0 are hydrogens and 0 are deuteriums.

In the tables below, the ZeroOcc column contains the number of atoms modelled with zero occupancy, the AltConf column contains the number of residues with at least one atom in alternate conformation and the Trace column contains the number of residues modelled with at most 2 atoms.

- Molecule 1 is a protein called Flavivirin protease NS3 catalytic subunit.

Mol	Chain	Residues	Atoms					ZeroOcc	AltConf	Trace
			Total	C	N	O	S			
1	A	415	3277	2052	595	615	15	0	0	0
			Total	C	N	O	S			
1	B	391	3121	1965	564	578	14	0	0	0

3 Residue-property plots (i)

These plots are drawn for all protein, RNA, DNA and oligosaccharide chains in the entry. The first graphic for a chain summarises the proportions of the various outlier classes displayed in the second graphic. The second graphic shows the sequence view annotated by issues in geometry and electron density. Residues are color-coded according to the number of geometric quality criteria for which they contain at least one outlier: green = 0, yellow = 1, orange = 2 and red = 3 or more. A red dot above a residue indicates a poor fit to the electron density (RSRZ > 2). Stretches of 2 or more consecutive residues without any outlier are shown as a green connector. Residues present in the sample, but not in the model, are shown in grey.

• Molecule 1: Flavivirin protease NS3 catalytic subunit

Chain A:

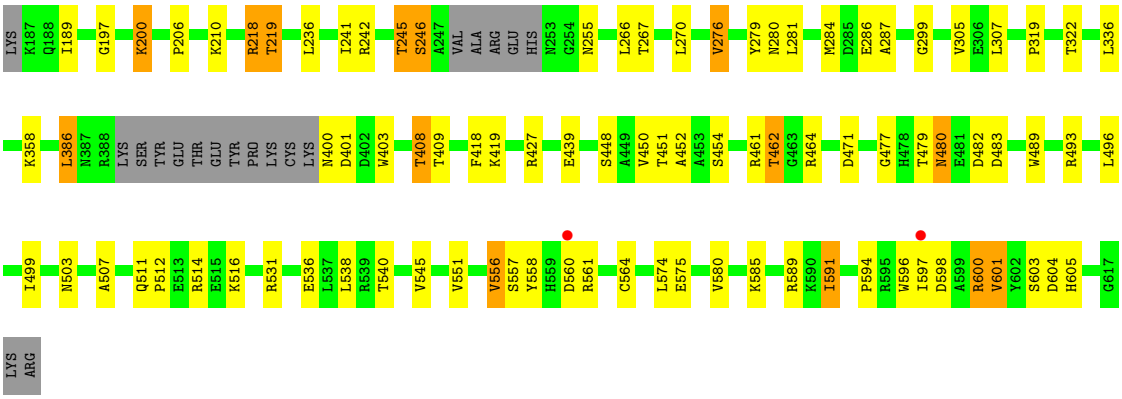

• Molecule 1: Flavivirin protease NS3 catalytic subunit

Chain B:

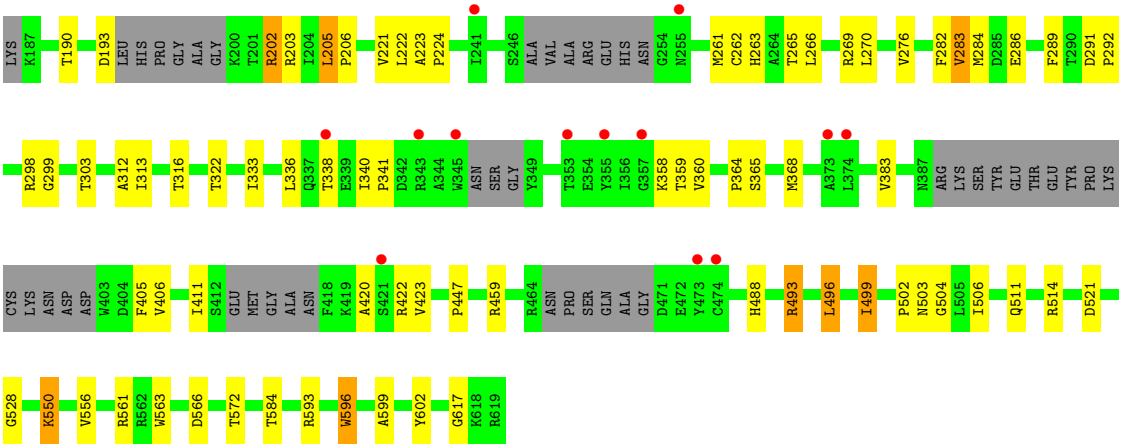

4 Data and refinement statistics (i)

Property	Value	Source
Space group	C 1 2 1	Depositor
Cell constants a, b, c, α, β, γ	172.13Å 38.09Å 148.11Å 90.00° 96.98° 90.00°	Depositor
Resolution (Å)	39.75 – 3.10 39.74 – 3.10	Depositor EDS
% Data completeness (in resolution range)	99.8 (39.75-3.10) 99.8 (39.74-3.10)	Depositor EDS
R_{merge}	0.15	Depositor
R_{sym}	(Not available)	Depositor
$< I/\sigma(I) >$ [1]	3.07 (at 3.12Å)	Xtriage
Refinement program	REFMAC 5.2	Depositor
R, R_{free}	0.243 , 0.331 0.243 , 0.331	Depositor DCC
R_{free} test set	925 reflections (5.15%)	wwPDB-VP
Wilson B-factor (Å^2)	56.3	Xtriage
Anisotropy	0.521	Xtriage
Bulk solvent k_{sol}(e/Å^3), B_{sol}(Å^2)	0.33 , 77.1	EDS
L-test for twinning[2]	$< \|L\| > = 0.46$, $< L^2 > = 0.29$	Xtriage
Estimated twinning fraction	No twinning to report.	Xtriage
F_o,F_c correlation	0.87	EDS
Total number of atoms	6398	wwPDB-VP
Average B, all atoms (Å^2)	42.0	wwPDB-VP

Xtriage's analysis on translational NCS is as follows: *The largest off-origin peak in the Patterson function is 4.68% of the height of the origin peak. No significant pseudotranslation is detected.*

[1] Intensities estimated from amplitudes.

[2] Theoretical values of $< |L| >$, $< L^2 >$ for acentric reflections are 0.5, 0.333 respectively for untwinned datasets, and 0.375, 0.2 for perfectly twinned datasets.

5 Model quality (i)

5.1 Standard geometry (i)

The Z score for a bond length (or angle) is the number of standard deviations the observed value is removed from the expected value. A bond length (or angle) with $|Z| > 5$ is considered an outlier worth inspection. RMSZ is the root-mean-square of all Z scores of the bond lengths (or angles).

Mol	Chain	Bond lengths		Bond angles	
		RMSZ	$\#\|Z\| >5$	RMSZ	$\#\|Z\| >5$
1	A	0.39	0/3346	0.53	0/4538
1	B	0.36	0/3183	0.50	0/4307
All	All	0.38	0/6529	0.52	0/8845

Chiral center outliers are detected by calculating the chiral volume of a chiral center and verifying if the center is modelled as a planar moiety or with the opposite hand.A planarity outlier is detected by checking planarity of atoms in a peptide group, atoms in a mainchain group or atoms of a sidechain that are expected to be planar.

Mol	Chain	#Chirality outliers	#Planarity outliers
1	A	0	2
1	B	0	1
All	All	0	3

There are no bond length outliers.

There are no bond angle outliers.

There are no chirality outliers.

All (3) planarity outliers are listed below:

Mol	Chain	Res	Type	Group
1	A	245	THR	Peptide
1	A	246	SER	Peptide
1	B	202	ARG	Peptide

5.2 Too-close contacts (i)

In the following table, the Non-H and H(model) columns list the number of non-hydrogen atoms and hydrogen atoms in the chain respectively. The H(added) column lists the number of hydrogen atoms added and optimized by MolProbity. The Clashes column lists the number of clashes within the asymmetric unit, whereas Symm-Clashes lists symmetry-related clashes.

Mol	Chain	Non-H	H(model)	H(added)	Clashes	Symm-Clashes
1	A	3277	0	3231	52	0
1	B	3121	0	3102	40	0
All	All	6398	0	6333	92	0

The all-atom clashscore is defined as the number of clashes found per 1000 atoms (including hydrogen atoms). The all-atom clashscore for this structure is 8.

All (92) close contacts within the same asymmetric unit are listed below, sorted by their clash magnitude.

Atom-1	Atom-2	Interatomic distance (Å)	Clash overlap (Å)
1:B:222:LEU:HD21	1:B:266:LEU:HD22	1.45	0.95
1:A:401:ASP:O	1:A:403:TRP:CD1	2.30	0.84
1:B:261:MET:HB2	1:B:265:THR:HG21	1.61	0.82
1:A:218:ARG:H	1:A:280:ASN:HD22	1.34	0.76
1:B:292:PRO:HD3	1:B:488:HIS:ND1	2.02	0.75
1:B:222:LEU:CD2	1:B:266:LEU:HD22	2.18	0.72
1:A:218:ARG:H	1:A:280:ASN:ND2	1.87	0.71
1:B:561:ARG:HH11	1:B:617:GLY:HA2	1.56	0.71
1:A:591:ILE:H	1:A:591:ILE:HD13	1.56	0.69
1:B:359:THR:HG22	1:B:422:ARG:HD2	1.76	0.68
1:A:386:LEU:HD12	1:A:408:THR:HG23	1.77	0.66
1:A:551:VAL:HG13	1:A:556:VAL:CG1	2.26	0.65
1:A:489:TRP:CE2	1:A:516:LYS:HG2	2.32	0.64
1:B:550:LYS:HD3	1:B:596:TRP:CE3	2.36	0.61
1:A:536:GLU:HG2	1:A:558:TYR:CG	2.36	0.61
1:B:221:VAL:HA	1:B:283:VAL:HG13	1.81	0.61
1:B:262:CYS:O	1:B:265:THR:HG22	2.01	0.60
1:A:598:ASP:OD2	1:A:600:ARG:NH1	2.35	0.59
1:A:496:LEU:HA	1:A:499:ILE:HD12	1.85	0.58
1:A:551:VAL:HG13	1:A:556:VAL:HG11	1.86	0.58
1:B:563:TRP:HA	1:B:566:ASP:OD2	2.04	0.58
1:A:496:LEU:HD22	1:A:507:ALA:HB3	1.85	0.57
1:A:197:GLY:O	1:A:200:LYS:HD2	2.04	0.57
1:A:564:CYS:HA	1:A:594:PRO:HA	1.86	0.57
1:A:483:ASP:HB3	1:A:489:TRP:HE1	1.69	0.56
1:A:270:LEU:HD23	1:A:276:VAL:HG11	1.87	0.56
1:B:383:VAL:HG12	1:B:405:PHE:HB2	1.87	0.56
1:A:401:ASP:O	1:A:403:TRP:HD1	1.87	0.55
1:A:284:MET:HE1	1:A:287:ALA:HA	1.87	0.55
1:A:575:GLU:HB2	1:A:580:VAL:HG22	1.87	0.55
1:B:224:PRO:HG3	1:B:286:GLU:HB2	1.90	0.54
1:A:598:ASP:O	1:A:601:VAL:HG22	2.08	0.53

Continued on next page...

Continued from previous page...

Atom-1	Atom-2	Interatomic distance (Å)	Clash overlap (Å)
1:A:604:ASP:OD2	1:A:605:HIS:N	2.41	0.53
1:B:223:ALA:O	1:B:262:CYS:HA	2.09	0.53
1:B:270:LEU:HB3	1:B:499:ILE:HG23	1.91	0.53
1:A:218:ARG:HB3	1:A:279:TYR:HA	1.91	0.53
1:A:557:SER:HB3	1:A:560:ASP:OD1	2.09	0.52
1:A:598:ASP:OD1	1:A:600:ARG:NH1	2.41	0.52
1:B:511:GLN:HA	1:B:514:ARG:HD2	1.92	0.52
1:A:319:PRO:HG2	1:A:322:THR:CG2	2.41	0.51
1:A:503:ASN:O	1:A:503:ASN:ND2	2.43	0.51
1:A:461:ARG:NH1	1:A:464:ARG:HH12	2.09	0.50
1:B:284:MET:HE1	1:B:298:ARG:HE	1.76	0.50
1:B:193:ASP:HA	1:B:316:THR:O	2.12	0.50
1:B:262:CYS:O	1:B:265:THR:CG2	2.58	0.50
1:A:358:LYS:HB3	1:A:403:TRP:CZ3	2.47	0.50
1:B:360:VAL:HG12	1:B:406:VAL:HB	1.94	0.49
1:B:365:SER:HB2	1:B:368:MET:H	1.77	0.49
1:B:502:PRO:C	1:B:504:GLY:H	2.16	0.49
1:B:364:PRO:HB3	1:B:447:PRO:HB3	1.95	0.48
1:A:480:ASN:HD22	1:A:482:ASP:H	1.61	0.47
1:B:359:THR:HG22	1:B:422:ARG:HB3	1.96	0.47
1:A:206:PRO:O	1:A:210:LYS:HB2	2.15	0.47
1:B:496:LEU:HD23	1:B:499:ILE:HG13	1.96	0.47
1:B:493:ARG:NH2	1:B:496:LEU:HB3	2.30	0.47
1:A:496:LEU:HD22	1:A:507:ALA:CB	2.44	0.46
1:A:598:ASP:O	1:A:600:ARG:N	2.49	0.46
1:A:219:THR:HG23	1:A:281:LEU:HB3	1.98	0.46
1:B:282:PHE:O	1:B:312:ALA:HA	2.15	0.46
1:A:427:ARG:O	1:A:450:VAL:HG22	2.15	0.46
1:A:266:LEU:O	1:A:270:LEU:HG	2.16	0.45
1:B:190:THR:O	1:B:313:ILE:HA	2.17	0.45
1:B:205:LEU:HB3	1:B:206:PRO:CD	2.47	0.45
1:A:511:GLN:HA	1:A:514:ARG:HG3	1.98	0.45
1:A:598:ASP:CG	1:A:600:ARG:NH1	2.70	0.44
1:B:261:MET:HB2	1:B:265:THR:CG2	2.39	0.44
1:A:200:LYS:H	1:A:200:LYS:HD3	1.82	0.44
1:A:427:ARG:HD2	1:A:477:GLY:O	2.18	0.44
1:B:205:LEU:HB3	1:B:206:PRO:HD3	2.00	0.44
1:A:236:LEU:HB3	1:A:241:ILE:HD13	2.00	0.44
1:A:319:PRO:HG2	1:A:322:THR:HG21	2.00	0.43
1:A:538:LEU:HD21	1:A:545:VAL:HG22	1.99	0.43
1:B:599:ALA:HA	1:B:602:TYR:CE1	2.53	0.43

Continued on next page...

Continued from previous page...

Atom-1	Atom-2	Interatomic distance (Å)	Clash overlap (Å)
1:B:299:GLY:HA3	1:B:496:LEU:HD11	2.01	0.43
1:B:358:LYS:C	1:B:420:ALA:HB1	2.39	0.43
1:A:189:ILE:HG13	1:A:305:VAL:HG11	2.01	0.43
1:A:299:GLY:HA3	1:A:496:LEU:HD11	2.00	0.43
1:B:360:VAL:HG22	1:B:423:VAL:HG22	2.00	0.43
1:B:340:ILE:HA	1:B:341:PRO:HD3	1.86	0.42
1:B:593:ARG:HE	1:B:593:ARG:HB2	1.67	0.42
1:A:439:GLU:HB3	1:A:596:TRP:HZ3	1.84	0.42
1:B:270:LEU:HD23	1:B:276:VAL:HG21	2.02	0.42
1:A:462:THR:HG23	1:A:471:ASP:HB3	2.01	0.41
1:A:197:GLY:O	1:A:200:LYS:CD	2.68	0.41
1:B:360:VAL:CG2	1:B:423:VAL:HG22	2.50	0.41
1:A:267:THR:HA	1:A:270:LEU:HD12	2.03	0.41
1:A:511:GLN:HB2	1:A:512:PRO:HD3	2.03	0.41
1:B:289:PHE:O	1:B:298:ARG:NH2	2.54	0.41
1:A:319:PRO:HG2	1:A:322:THR:HG23	2.02	0.41
1:B:291:ASP:HA	1:B:292:PRO:HD3	1.96	0.41
1:A:452:ALA:HA	1:A:479:THR:HG21	2.03	0.40
1:A:604:ASP:OD2	1:A:604:ASP:C	2.59	0.40

There are no symmetry-related clashes.

5.3 Torsion angles (i)

5.3.1 Protein backbone (i)

In the following table, the Percentiles column shows the percent Ramachandran outliers of the chain as a percentile score with respect to all X-ray entries followed by that with respect to entries of similar resolution.

The Analysed column shows the number of residues for which the backbone conformation was analysed, and the total number of residues.

Mol	Chain	Analysed	Favoured	Allowed	Outliers	Percentiles
1	A	409/434 (94%)	370 (90%)	36 (9%)	3 (1%)	22 57
1	B	377/434 (87%)	349 (93%)	25 (7%)	3 (1%)	19 54
All	All	786/868 (91%)	719 (92%)	61 (8%)	6 (1%)	19 54

All (6) Ramachandran outliers are listed below:

Mol	Chain	Res	Type
1	A	561	ARG
1	B	503	ASN
1	A	246	SER
1	A	585	LYS
1	B	528	GLY
1	B	411	ILE

5.3.2 Protein sidechains (i)

In the following table, the Percentiles column shows the percent sidechain outliers of the chain as a percentile score with respect to all X-ray entries followed by that with respect to entries of similar resolution.

The Analysed column shows the number of residues for which the sidechain conformation was analysed, and the total number of residues.

Mol	Chain	Analysed	Rotameric	Outliers	Percentiles
1	A	347/365 (95%)	315 (91%)	32 (9%)	9 33
1	B	332/365 (91%)	310 (93%)	22 (7%)	16 47
All	All	679/730 (93%)	625 (92%)	54 (8%)	12 40

All (54) residues with a non-rotameric sidechain are listed below:

Mol	Chain	Res	Type
1	A	200	LYS
1	A	218	ARG
1	A	219	THR
1	A	242	ARG
1	A	245	THR
1	A	255	ASN
1	A	276	VAL
1	A	286	GLU
1	A	307	LEU
1	A	336	LEU
1	A	386	LEU
1	A	400	ASN
1	A	408	THR
1	A	409	THR
1	A	418	PHE
1	A	419	LYS
1	A	448	SER
1	A	451	THR

Continued on next page...

Continued from previous page...

Mol	Chain	Res	Type
1	A	454	SER
1	A	462	THR
1	A	480	ASN
1	A	493	ARG
1	A	531	ARG
1	A	540	THR
1	A	556	VAL
1	A	574	LEU
1	A	589	ARG
1	A	591	ILE
1	A	597	ILE
1	A	600	ARG
1	A	601	VAL
1	A	603	SER
1	B	202	ARG
1	B	203	ARG
1	B	205	LEU
1	B	263	HIS
1	B	269	ARG
1	B	283	VAL
1	B	303	THR
1	B	322	THR
1	B	333	ILE
1	B	336	LEU
1	B	338	THR
1	B	459	ARG
1	B	493	ARG
1	B	496	LEU
1	B	499	ILE
1	B	506	ILE
1	B	521	ASP
1	B	550	LYS
1	B	556	VAL
1	B	572	THR
1	B	584	THR
1	B	596	TRP

Sometimes sidechains can be flipped to improve hydrogen bonding and reduce clashes. All (8) such sidechains are listed below:

Mol	Chain	Res	Type
1	A	255	ASN
1	A	268	HIS

Continued on next page...

Continued from previous page...

Mol	Chain	Res	Type
1	A	280	ASN
1	A	337	GLN
1	A	480	ASN
1	B	214	ASN
1	B	500	ASN
1	B	578	ASN

5.3.3 RNA (i)

There are no RNA molecules in this entry.

5.4 Non-standard residues in protein, DNA, RNA chains (i)

There are no non-standard protein/DNA/RNA residues in this entry.

5.5 Carbohydrates (i)

There are no monosaccharides in this entry.

5.6 Ligand geometry (i)

There are no ligands in this entry.

5.7 Other polymers (i)

There are no such residues in this entry.

5.8 Polymer linkage issues (i)

There are no chain breaks in this entry.

6 Fit of model and data (i)

6.1 Protein, DNA and RNA chains (i)

In the following table, the column labelled '#RSRZ> 2' contains the number (and percentage) of RSRZ outliers, followed by percent RSRZ outliers for the chain as percentile scores relative to all X-ray entries and entries of similar resolution. The OWAB column contains the minimum, median, 95th percentile and maximum values of the occupancy-weighted average B-factor per residue. The column labelled 'Q< 0.9' lists the number of (and percentage) of residues with an average occupancy less than 0.9.

Mol	Chain	Analysed	<RSRZ>	#RSRZ>2			OWAB(Å^2)	Q<0.9
1	A	415/434 (95%)	-0.17	2 (0%)	91	81	7, 34, 72, 85	38 (9%)
1	B	391/434 (90%)	0.10	13 (3%)	46	24	14, 45, 77, 90	66 (16%)
All	All	806/868 (92%)	-0.04	15 (1%)	66	46	7, 41, 75, 90	104 (12%)

All (15) RSRZ outliers are listed below:

Mol	Chain	Res	Type	RSRZ
1	B	255	ASN	4.1
1	B	421	SER	3.6
1	B	357	GLY	2.8
1	B	338	THR	2.7
1	B	373	ALA	2.6
1	B	355	TYR	2.5
1	B	374	LEU	2.4
1	A	560	ASP	2.4
1	B	353	THR	2.3
1	A	597	ILE	2.3
1	B	474	CYS	2.2
1	B	473	TYR	2.1
1	B	345	TRP	2.1
1	B	343	ARG	2.1
1	B	241	ILE	2.0

6.2 Non-standard residues in protein, DNA, RNA chains (i)

There are no non-standard protein/DNA/RNA residues in this entry.

6.3 Carbohydrates (i)

There are no monosaccharides in this entry.

6.4 Ligands (i)

There are no ligands in this entry.

6.5 Other polymers (i)

There are no such residues in this entry.