Full wwPDB X-ray Structure Validation Report (i)

Oct 11, 2021 – 03:12 PM EDT

PDB ID	:	2OUY
Title	:	crystal structure of pde10a2 mutant D564A in complex with cAMP.
Authors	:	Wang, H.C.; Liu, Y.D.; Hou, J.; Zheng, M.Y.; Robinson, H.
Deposited on	:	2007-02-12
Resolution	:	1.90 Å(reported)

This is a Full wwPDB X-ray Structure Validation Report for a publicly released PDB entry.

We welcome your comments at *validation@mail.wwpdb.org*
A user guide is available at
https://www.wwpdb.org/validation/2017/XrayValidationReportHelp
with specific help available everywhere you see the (i) symbol.

The following versions of software and data (see references (i)) were used in the production of this report:

MolProbity	:	4.02b-467
Mogul	:	1.8.5 (274361), CSD as541be (2020)
Xtriage (Phenix)	:	1.13
EDS	:	2.23.2
buster-report	:	1.1.7 (2018)
Percentile statistics	:	20191225.v01 (using entries in the PDB archive December 25th 2019)
Refmac	:	5.8.0158
CCP4	:	7.0.044 (Gargrove)
Ideal geometry (proteins)	:	Engh & Huber (2001)
Ideal geometry (DNA, RNA)	:	Parkinson et al. (1996)
Validation Pipeline (wwPDB-VP)	:	2.23.2

1 Overall quality at a glance (i)

The following experimental techniques were used to determine the structure:
X-RAY DIFFRACTION

The reported resolution of this entry is 1.90 Å.

Percentile scores (ranging between 0-100) for global validation metrics of the entry are shown in the following graphic. The table shows the number of entries on which the scores are based.

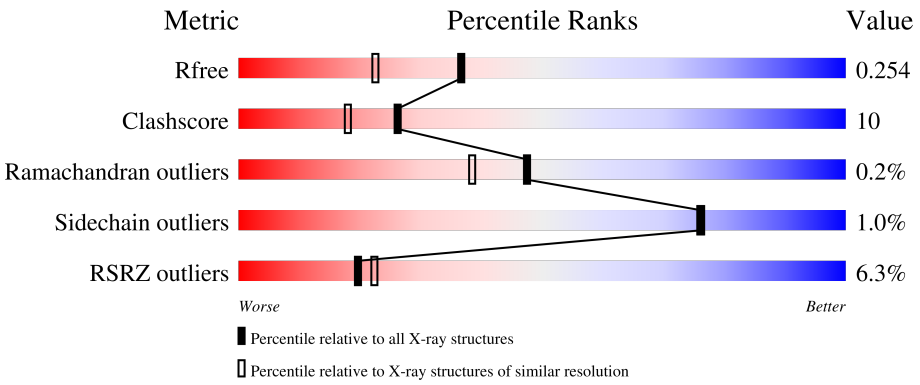

Metric	Whole archive (#Entries)	Similar resolution (#Entries, resolution range(Å))
R_{free}	130704	6207 (1.90-1.90)
Clashscore	141614	6847 (1.90-1.90)
Ramachandran outliers	138981	6760 (1.90-1.90)
Sidechain outliers	138945	6760 (1.90-1.90)
RSRZ outliers	127900	6082 (1.90-1.90)

The table below summarises the geometric issues observed across the polymeric chains and their fit to the electron density. The red, orange, yellow and green segments of the lower bar indicate the fraction of residues that contain outliers for >=3, 2, 1 and 0 types of geometric quality criteria respectively. A grey segment represents the fraction of residues that are not modelled. The numeric value for each fraction is indicated below the corresponding segment, with a dot representing fractions <=5% The upper red bar (where present) indicates the fraction of residues that have poor fit to the electron density. The numeric value is given above the bar.

Mol	Chain	Length	Quality of chain
1	A	331	5% 81% 18% •
1	B	331	7% 71% 21% • 7%

2 Entry composition (i)

There are 5 unique types of molecules in this entry. The entry contains 5526 atoms, of which 0 are hydrogens and 0 are deuteriums.

In the tables below, the ZeroOcc column contains the number of atoms modelled with zero occupancy, the AltConf column contains the number of residues with at least one atom in alternate conformation and the Trace column contains the number of residues modelled with at most 2 atoms.

- Molecule 1 is a protein called cAMP and cAMP-inhibited cGMP 3',5'-cyclic phosphodiesterase 10A.

Mol	Chain	Residues	Atoms					ZeroOcc	AltConf	Trace
			Total	C	N	O	S			
1	A	330	2677	1709	455	488	25	0	0	0
1	B	309	2503	1594	428	456	25	0	0	0

There are 8 discrepancies between the modelled and reference sequences:

Chain	Residue	Modelled	Actual	Comment	Reference
A	446	SER	-	cloning artifact	UNP Q9Y233
A	447	HIS	-	cloning artifact	UNP Q9Y233
A	448	MET	-	cloning artifact	UNP Q9Y233
A	564	ASN	ASP	engineered mutation	UNP Q9Y233
B	446	SER	-	cloning artifact	UNP Q9Y233
B	447	HIS	-	cloning artifact	UNP Q9Y233
B	448	MET	-	cloning artifact	UNP Q9Y233
B	564	ASN	ASP	engineered mutation	UNP Q9Y233

- Molecule 2 is ZINC ION (three-letter code: ZN) (formula: Zn).

Mol	Chain	Residues	Atoms		ZeroOcc	AltConf
			Total	Zn		
2	A	1	1	1	0	0
2	B	1	1	1	0	0

- Molecule 3 is MAGNESIUM ION (three-letter code: MG) (formula: Mg).

Mol	Chain	Residues	Atoms		ZeroOcc	AltConf
			Total	Mg		
3	A	1	1	1	0	0

Continued on next page...

Continued from previous page...

Mol	Chain	Residues	Atoms		ZeroOcc	AltConf
			Total	Mg		
3	B	1	1	1	0	0

- Molecule 4 is ADENOSINE-3',5'-CYCLIC-MONOPHOSPHATE (three-letter code: CMP) (formula: $C_{10}H_{12}N_5O_6P$).

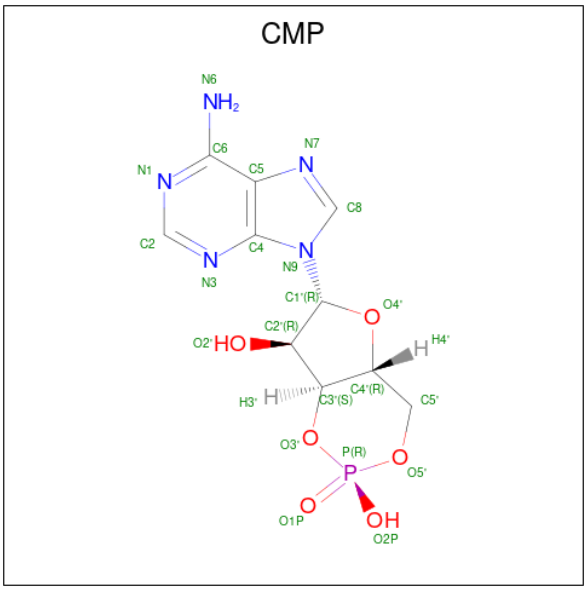

Mol	Chain	Residues	Atoms					ZeroOcc	AltConf
			Total	C	N	O	P		
4	A	1	22	10	5	6	1	0	0

- Molecule 5 is water.

Mol	Chain	Residues	Atoms		ZeroOcc	AltConf
			Total	O		
5	A	193	193	193	0	0
5	B	127	Total	O	0	0
			127	127		

3 Residue-property plots (i)

These plots are drawn for all protein, RNA, DNA and oligosaccharide chains in the entry. The first graphic for a chain summarises the proportions of the various outlier classes displayed in the second graphic. The second graphic shows the sequence view annotated by issues in geometry and electron density. Residues are color-coded according to the number of geometric quality criteria for which they contain at least one outlier: green = 0, yellow = 1, orange = 2 and red = 3 or more. A red dot above a residue indicates a poor fit to the electron density (RSRZ > 2). Stretches of 2 or more consecutive residues without any outlier are shown as a green connector. Residues present in the sample, but not in the model, are shown in grey.

• Molecule 1: cAMP and cAMP-inhibited cGMP 3',5'-cyclic phosphodiesterase 10A

Chain A:

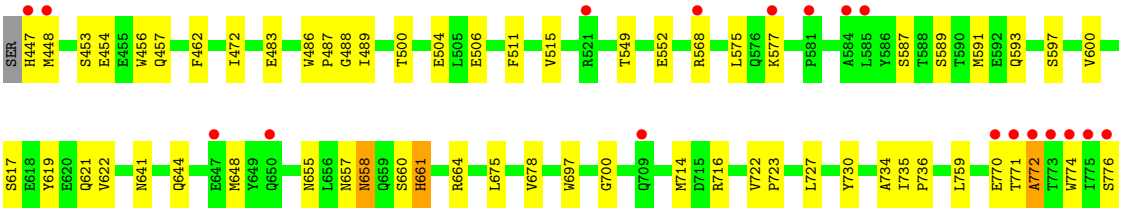

• Molecule 1: cAMP and cAMP-inhibited cGMP 3',5'-cyclic phosphodiesterase 10A

Chain B:

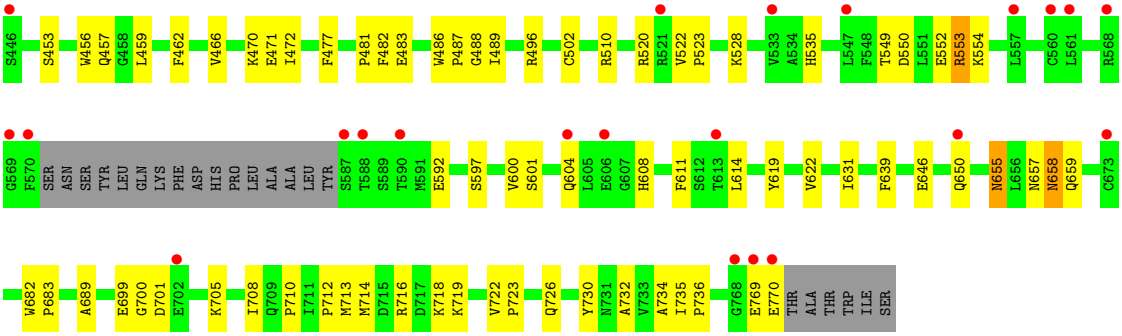

4 Data and refinement statistics (i)

Property	Value	Source
Space group	P 21 21 21	Depositor
Cell constants a, b, c, α, β, γ	49.39Å 82.27Å 155.93Å 90.00° 90.00° 90.00°	Depositor
Resolution (Å)	30.00 – 1.90 29.29 – 1.90	Depositor EDS
% Data completeness (in resolution range)	(Not available) (30.00-1.90) 88.8 (29.29-1.90)	Depositor EDS
R_{merge}	0.08	Depositor
R_{sym}	(Not available)	Depositor
$< I/\sigma(I) >$ [1]	2.82 (at 1.91Å)	Xtriage
Refinement program	CNS 1.1	Depositor
R, R_{free}	0.217 , 0.253 0.217 , 0.254	Depositor DCC
R_{free} test set	4726 reflections (10.05%)	wwPDB-VP
Wilson B-factor (Å^2)	21.5	Xtriage
Anisotropy	0.674	Xtriage
Bulk solvent k_{sol}(e/Å^3), B_{sol}(Å^2)	0.33 , 35.7	EDS
L-test for twinning[2]	$< \|L\| > = 0.48$, $< L^2 > = 0.31$	Xtriage
Estimated twinning fraction	No twinning to report.	Xtriage
F_o,F_c correlation	0.94	EDS
Total number of atoms	5526	wwPDB-VP
Average B, all atoms (Å^2)	27.0	wwPDB-VP

Xtriage's analysis on translational NCS is as follows: *The largest off-origin peak in the Patterson function is 5.00% of the height of the origin peak. No significant pseudotranslation is detected.*

[1]Intensities estimated from amplitudes.

[2]Theoretical values of $< |L| >$, $< L^2 >$ for acentric reflections are 0.5, 0.333 respectively for untwinned datasets, and 0.375, 0.2 for perfectly twinned datasets.

5 Model quality (i)

5.1 Standard geometry (i)

Bond lengths and bond angles in the following residue types are not validated in this section: ZN, CMP, MG

The Z score for a bond length (or angle) is the number of standard deviations the observed value is removed from the expected value. A bond length (or angle) with $|Z| > 5$ is considered an outlier worth inspection. RMSZ is the root-mean-square of all Z scores of the bond lengths (or angles).

Mol	Chain	Bond lengths		Bond angles	
		RMSZ	$\#\|Z\| >5$	RMSZ	$\#\|Z\| >5$
1	A	0.34	0/2744	0.55	0/3716
1	B	0.33	0/2562	0.55	0/3465
All	All	0.34	0/5306	0.55	0/7181

There are no bond length outliers.

There are no bond angle outliers.

There are no chirality outliers.

There are no planarity outliers.

5.2 Too-close contacts (i)

In the following table, the Non-H and H(model) columns list the number of non-hydrogen atoms and hydrogen atoms in the chain respectively. The H(added) column lists the number of hydrogen atoms added and optimized by MolProbity. The Clashes column lists the number of clashes within the asymmetric unit, whereas Symm-Clashes lists symmetry-related clashes.

Mol	Chain	Non-H	H(model)	H(added)	Clashes	Symm-Clashes
1	A	2677	0	2635	49	0
1	B	2503	0	2469	60	0
2	A	1	0	0	0	0
2	B	1	0	0	0	0
3	A	1	0	0	0	0
3	B	1	0	0	0	0
4	A	22	0	11	1	0
5	A	193	0	0	1	0
5	B	127	0	0	3	0
All	All	5526	0	5115	107	0

The all-atom clashscore is defined as the number of clashes found per 1000 atoms (including

hydrogen atoms). The all-atom clashscore for this structure is 10.

All (107) close contacts within the same asymmetric unit are listed below, sorted by their clash magnitude.

Atom-1	Atom-2	Interatomic distance (Å)	Clash overlap (Å)
4:A:779:CMP:H2	4:A:779:CMP:C2	0.97	1.48
1:A:771:THR:HG22	1:A:772:ALA:H	1.26	1.01
1:A:655:ASN:H	1:A:661:HIS:HD2	1.27	0.78
1:B:522:VAL:HG12	1:B:523:PRO:HD2	1.67	0.77
1:B:481:PRO:HG2	1:B:482:PHE:CE1	2.23	0.74
1:B:712:PRO:HA	1:B:718:LYS:HD2	1.70	0.73
1:A:641:ASN:HD22	1:A:664:ARG:HH11	1.38	0.70
1:B:549:THR:C	1:B:553:ARG:HH12	1.98	0.67
1:A:771:THR:HG22	1:A:772:ALA:N	2.06	0.66
1:A:776:SER:HB3	1:B:732:ALA:O	1.97	0.65
1:B:470:LYS:HG3	1:B:471:GLU:HG3	1.78	0.65
1:A:655:ASN:H	1:A:661:HIS:CD2	2.13	0.64
1:B:496:ARG:NH2	5:B:76:HOH:O	2.31	0.64
1:B:550:ASP:HA	1:B:553:ARG:NH1	2.11	0.64
1:B:483:GLU:HA	1:B:486:TRP:CE2	2.33	0.64
1:B:528:LYS:HE2	5:B:266:HOH:O	1.98	0.63
1:B:655:ASN:HD21	1:B:657:ASN:ND2	1.98	0.62
1:B:655:ASN:HD21	1:B:657:ASN:HD22	1.48	0.61
1:A:658:ASN:HD22	1:A:658:ASN:C	2.03	0.60
1:A:771:THR:HA	1:B:713:MET:HB3	1.84	0.59
1:B:522:VAL:CG1	1:B:523:PRO:HD2	2.32	0.59
1:B:470:LYS:HG3	1:B:471:GLU:H	1.66	0.59
1:B:619:TYR:O	1:B:622:VAL:HG12	2.03	0.58
1:B:453:SER:O	1:B:457:GLN:HG3	2.04	0.58
1:B:646:GLU:HG2	1:B:650:GLN:NE2	2.19	0.58
1:B:462:PHE:CD2	1:B:488:GLY:HA3	2.40	0.57
1:A:655:ASN:N	1:A:661:HIS:HD2	2.02	0.56
1:B:655:ASN:ND2	1:B:657:ASN:H	2.04	0.55
1:B:716:ARG:O	1:B:719:LYS:HE3	2.06	0.55
1:A:772:ALA:HB1	1:A:774:TRP:CZ3	2.41	0.55
1:A:619:TYR:O	1:A:622:VAL:HG12	2.07	0.55
1:B:699:GLU:HB3	1:B:714:MET:HE2	1.89	0.54
1:B:550:ASP:N	1:B:553:ARG:HH12	2.05	0.54
1:A:453:SER:O	1:A:457:GLN:HG3	2.08	0.54
1:A:483:GLU:HA	1:A:486:TRP:CE2	2.44	0.52
1:A:770:GLU:HG2	1:A:771:THR:N	2.24	0.52
1:A:511:PHE:O	1:A:515:VAL:HG23	2.09	0.52
1:A:727:LEU:HD12	1:A:759:LEU:HD11	1.91	0.52

Continued on next page...

Continued from previous page...

Atom-1	Atom-2	Interatomic distance (Å)	Clash overlap (Å)
1:A:453:SER:HA	1:A:456:TRP:NE1	2.25	0.52
1:B:470:LYS:HG3	1:B:471:GLU:N	2.26	0.50
1:B:658:ASN:C	1:B:658:ASN:HD22	2.13	0.50
1:A:472:ILE:HD11	1:A:489:ILE:HG23	1.92	0.50
1:B:600:VAL:O	1:B:604:GLN:HG3	2.11	0.50
1:A:568:ARG:HG3	1:A:568:ARG:HH11	1.76	0.49
1:B:453:SER:HA	1:B:456:TRP:NE1	2.28	0.49
1:B:658:ASN:HD22	1:B:659:GLN:N	2.10	0.48
1:B:510:ARG:HD3	1:B:608:HIS:CE1	2.49	0.48
1:A:771:THR:CG2	1:A:772:ALA:H	2.07	0.48
1:B:553:ARG:HH11	1:B:553:ARG:CG	2.27	0.48
1:A:735:ILE:HB	1:A:736:PRO:HD3	1.96	0.48
1:A:453:SER:HA	1:A:456:TRP:CD1	2.48	0.47
1:B:549:THR:C	1:B:553:ARG:NH1	2.66	0.47
1:A:617:SER:O	1:A:621:GLN:HG3	2.14	0.47
1:A:486:TRP:HB2	1:A:487:PRO:HD3	1.96	0.46
1:A:462:PHE:CD2	1:A:488:GLY:HA3	2.50	0.46
1:A:722:VAL:HB	1:A:723:PRO:HD3	1.96	0.46
1:B:769:GLU:O	1:B:770:GLU:C	2.54	0.46
1:A:675:LEU:O	1:A:678:VAL:HG22	2.16	0.46
1:A:587:SER:HB2	5:A:182:HOH:O	2.16	0.45
1:B:549:THR:OG1	1:B:552:GLU:HG3	2.16	0.45
1:B:611:PHE:HB3	1:B:614:LEU:HD12	1.97	0.45
1:B:553:ARG:NH1	1:B:553:ARG:HG3	2.32	0.44
1:A:589:SER:O	1:A:593:GLN:HG3	2.17	0.44
1:B:466:VAL:HG12	5:B:160:HOH:O	2.18	0.44
1:A:549:THR:OG1	1:A:552:GLU:HG3	2.18	0.43
1:B:700:GLY:HA3	1:B:714:MET:O	2.19	0.43
1:B:550:ASP:O	1:B:554:LYS:HG2	2.17	0.43
1:A:770:GLU:HG2	1:A:771:THR:H	1.83	0.43
1:B:646:GLU:CG	1:B:650:GLN:HE21	2.31	0.43
1:A:776:SER:HA	1:B:639:PHE:CD2	2.53	0.43
1:B:459:LEU:HD13	1:B:487:PRO:HB2	2.01	0.43
1:A:655:ASN:ND2	1:A:657:ASN:H	2.17	0.43
1:B:592:GLU:HB3	1:B:631:ILE:HA	2.00	0.43
1:B:597:SER:HA	1:B:600:VAL:HG22	2.01	0.43
1:A:454:GLU:CD	1:A:454:GLU:H	2.22	0.43
1:A:504:GLU:HG2	1:A:506:GLU:OE1	2.18	0.42
1:A:770:GLU:CG	1:A:771:THR:N	2.82	0.42
1:B:477:PHE:HB3	1:B:535:HIS:CE1	2.54	0.42
1:A:727:LEU:CD1	1:A:759:LEU:HD11	2.49	0.42

Continued on next page...

Continued from previous page...

Atom-1	Atom-2	Interatomic distance (Å)	Clash overlap (Å)
1:B:655:ASN:C	1:B:655:ASN:HD22	2.23	0.42
1:A:700:GLY:HA3	1:A:714:MET:O	2.20	0.42
1:B:701:ASP:O	1:B:705:LYS:HG3	2.19	0.42
1:B:735:ILE:HB	1:B:736:PRO:HD3	2.02	0.42
1:B:549:THR:O	1:B:553:ARG:NH1	2.53	0.42
1:B:682:TRP:HB3	1:B:683:PRO:HD3	2.02	0.42
1:B:689:ALA:O	1:B:726:GLN:NE2	2.53	0.42
1:A:575:LEU:HD11	1:A:591:MET:SD	2.60	0.41
1:A:658:ASN:ND2	1:A:660:SER:OG	2.52	0.41
1:B:520:ARG:O	1:B:522:VAL:HG23	2.21	0.41
1:A:770:GLU:CG	1:A:771:THR:H	2.34	0.41
1:B:522:VAL:HG12	1:B:523:PRO:CD	2.46	0.41
1:B:646:GLU:HG2	1:B:650:GLN:HE21	1.85	0.41
1:A:447:HIS:C	1:A:448:MET:HE2	2.41	0.41
1:A:448:MET:HA	1:A:448:MET:HE2	2.02	0.41
1:A:597:SER:O	1:A:600:VAL:HG22	2.20	0.41
1:A:506:GLU:CD	1:A:506:GLU:H	2.25	0.41
1:B:600:VAL:HG23	1:B:601:SER:N	2.36	0.41
1:B:730:TYR:HA	1:B:734:ALA:HB3	2.03	0.41
1:A:697:TRP:HB3	1:A:716:ARG:HB3	2.03	0.40
1:B:472:ILE:HD11	1:B:489:ILE:HG23	2.02	0.40
1:B:722:VAL:HB	1:B:723:PRO:HD3	2.04	0.40
1:A:644:GLN:O	1:A:648:MET:HG3	2.21	0.40
1:A:730:TYR:HA	1:A:734:ALA:HB3	2.02	0.40
1:B:708:ILE:O	1:B:710:PRO:HD3	2.21	0.40
1:A:577:LYS:HA	1:A:577:LYS:HD2	1.86	0.40
1:B:502:CYS:SG	1:B:554:LYS:HE2	2.60	0.40
1:B:553:ARG:NH1	1:B:553:ARG:CG	2.85	0.40

There are no symmetry-related clashes.

5.3 Torsion angles (i)

5.3.1 Protein backbone (i)

In the following table, the Percentiles column shows the percent Ramachandran outliers of the chain as a percentile score with respect to all X-ray entries followed by that with respect to entries of similar resolution.

The Analysed column shows the number of residues for which the backbone conformation was analysed, and the total number of residues.

Mol	Chain	Analysed	Favoured	Allowed	Outliers	Percentiles	
1	A	328/331 (99%)	318 (97%)	9 (3%)	1 (0%)	41	31
1	B	305/331 (92%)	298 (98%)	7 (2%)	0	100	100
All	All	633/662 (96%)	616 (97%)	16 (2%)	1 (0%)	47	38

All (1) Ramachandran outliers are listed below:

Mol	Chain	Res	Type
1	A	772	ALA

5.3.2 Protein sidechains (i)

In the following table, the Percentiles column shows the percent sidechain outliers of the chain as a percentile score with respect to all X-ray entries followed by that with respect to entries of similar resolution.

The Analysed column shows the number of residues for which the sidechain conformation was analysed, and the total number of residues.

Mol	Chain	Analysed	Rotameric	Outliers	Percentiles	
1	A	298/299 (100%)	295 (99%)	3 (1%)	76	76
1	B	280/299 (94%)	277 (99%)	3 (1%)	73	73
All	All	578/598 (97%)	572 (99%)	6 (1%)	76	76

All (6) residues with a non-rotameric sidechain are listed below:

Mol	Chain	Res	Type
1	A	500	THR
1	A	658	ASN
1	A	661	HIS
1	B	553	ARG
1	B	655	ASN
1	B	658	ASN

Sometimes sidechains can be flipped to improve hydrogen bonding and reduce clashes. All (10) such sidechains are listed below:

Mol	Chain	Res	Type
1	A	593	GLN
1	A	641	ASN
1	A	655	ASN
1	A	658	ASN

Continued on next page...

Continued from previous page...

Mol	Chain	Res	Type
1	A	661	HIS
1	A	743	GLN
1	B	650	GLN
1	B	655	ASN
1	B	657	ASN
1	B	658	ASN

5.3.3 RNA (i)

There are no RNA molecules in this entry.

5.4 Non-standard residues in protein, DNA, RNA chains (i)

There are no non-standard protein/DNA/RNA residues in this entry.

5.5 Carbohydrates (i)

There are no monosaccharides in this entry.

5.6 Ligand geometry (i)

Of 5 ligands modelled in this entry, 4 are monoatomic - leaving 1 for Mogul analysis.

In the following table, the Counts columns list the number of bonds (or angles) for which Mogul statistics could be retrieved, the number of bonds (or angles) that are observed in the model and the number of bonds (or angles) that are defined in the Chemical Component Dictionary. The Link column lists molecule types, if any, to which the group is linked. The Z score for a bond length (or angle) is the number of standard deviations the observed value is removed from the expected value. A bond length (or angle) with $|Z| > 2$ is considered an outlier worth inspection. RMSZ is the root-mean-square of all Z scores of the bond lengths (or angles).

Mol	Type	Chain	Res	Link	Bond lengths			Bond angles		
					Counts	RMSZ	$\#\|Z\| > 2$	Counts	RMSZ	$\#\|Z\| > 2$
4	CMP	A	779	-	22,25,25	1.19	2 (9%)	24,39,39	2.06	4 (16%)

In the following table, the Chirals column lists the number of chiral outliers, the number of chiral centers analysed, the number of these observed in the model and the number defined in the Chemical Component Dictionary. Similar counts are reported in the Torsion and Rings columns. '-' means no outliers of that kind were identified.

Mol	Type	Chain	Res	Link	Chirals	Torsions	Rings
4	CMP	A	779	-	-	0/0/31/31	0/4/4/4

All (2) bond length outliers are listed below:

Mol	Chain	Res	Type	Atoms	Z	Observed(Å)	Ideal(Å)
4	A	779	CMP	P-O5'	3.16	1.61	1.57
4	A	779	CMP	P-O3'	2.62	1.62	1.57

All (4) bond angle outliers are listed below:

Mol	Chain	Res	Type	Atoms	Z	Observed(^{o})	Ideal(^{o})
4	A	779	CMP	O3'-C3'-C4'	-8.27	104.47	110.71
4	A	779	CMP	O2P-P-O1P	3.42	119.44	108.73
4	A	779	CMP	C5-C6-N6	2.32	123.88	120.35
4	A	779	CMP	O3'-C3'-C2'	2.23	117.79	115.61

There are no chirality outliers.

There are no torsion outliers.

There are no ring outliers.

1 monomer is involved in 1 short contact:

Mol	Chain	Res	Type	Clashes	Symm-Clashes
4	A	779	CMP	1	0

The following is a two-dimensional graphical depiction of Mogul quality analysis of bond lengths, bond angles, torsion angles, and ring geometry for all instances of the Ligand of Interest. In addition, ligands with molecular weight > 250 and outliers as shown on the validation Tables will also be included. For torsion angles, if less then 5% of the Mogul distribution of torsion angles is within 10 degrees of the torsion angle in question, then that torsion angle is considered an outlier. Any bond that is central to one or more torsion angles identified as an outlier by Mogul will be highlighted in the graph. For rings, the root-mean-square deviation (RMSD) between the ring in question and similar rings identified by Mogul is calculated over all ring torsion angles. If the average RMSD is greater than 60 degrees and the minimal RMSD between the ring in question and any Mogul-identified rings is also greater than 60 degrees, then that ring is considered an outlier. The outliers are highlighted in purple. The color gray indicates Mogul did not find sufficient equivalents in the CSD to analyse the geometry.

Ligand CMP A 779

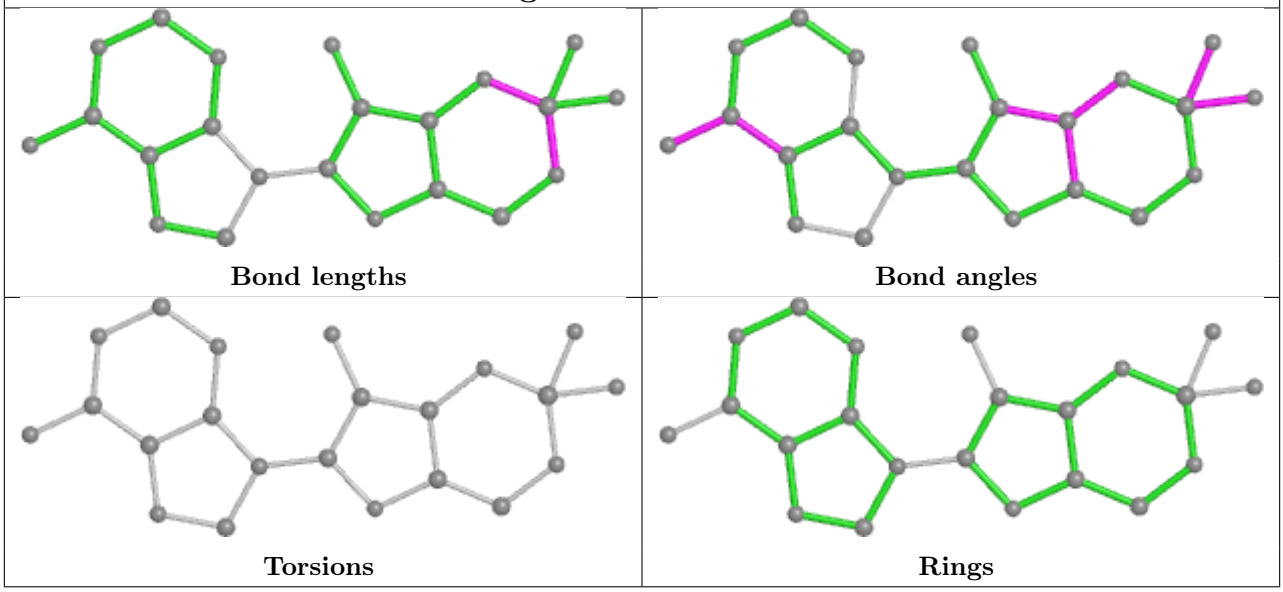

5.7 Other polymers (i)

There are no such residues in this entry.

5.8 Polymer linkage issues (i)

There are no chain breaks in this entry.

6 Fit of model and data (i)

6.1 Protein, DNA and RNA chains (i)

In the following table, the column labelled '#RSRZ> 2' contains the number (and percentage) of RSRZ outliers, followed by percent RSRZ outliers for the chain as percentile scores relative to all X-ray entries and entries of similar resolution. The OWAB column contains the minimum, median, 95th percentile and maximum values of the occupancy-weighted average B-factor per residue. The column labelled 'Q< 0.9' lists the number of (and percentage) of residues with an average occupancy less than 0.9.

Mol	Chain	Analysed	<RSRZ>	#RSRZ>2			OWAB(Å^2)	Q<0.9
1	A	330/331 (99%)	0.40	18 (5%)	25	28	14, 23, 38, 56	0
1	B	309/331 (93%)	0.63	22 (7%)	16	17	16, 28, 40, 45	0
All	All	639/662 (96%)	0.51	40 (6%)	20	22	14, 26, 39, 56	0

All (40) RSRZ outliers are listed below:

Mol	Chain	Res	Type	RSRZ
1	A	773	THR	9.8
1	B	588	THR	9.3
1	A	776	SER	7.5
1	B	587	SER	7.4
1	A	775	ILE	7.1
1	A	771	THR	6.4
1	A	772	ALA	5.6
1	A	774	TRP	5.5
1	A	447	HIS	4.4
1	B	770	GLU	4.2
1	B	569	GLY	3.9
1	B	446	SER	3.7
1	B	570	PHE	3.6
1	A	650	GLN	3.3
1	B	521	ARG	3.2
1	A	584	ALA	3.1
1	A	448	MET	3.0
1	B	590	THR	2.9
1	A	770	GLU	2.9
1	B	561	LEU	2.8
1	A	585	LEU	2.7
1	B	650	GLN	2.7
1	B	613	THR	2.7
1	A	568	ARG	2.6

Continued on next page...

Continued from previous page...

Mol	Chain	Res	Type	RSRZ
1	B	568	ARG	2.6
1	B	673	CYS	2.5
1	B	606	GLU	2.4
1	A	521	ARG	2.4
1	A	709	GLN	2.4
1	B	557	LEU	2.4
1	B	547	LEU	2.3
1	B	769	GLU	2.2
1	A	581	PRO	2.2
1	B	533	VAL	2.2
1	B	560	CYS	2.1
1	A	577	LYS	2.1
1	B	702	GLU	2.1
1	B	768	GLY	2.1
1	A	647	GLU	2.0
1	B	604	GLN	2.0

6.2 Non-standard residues in protein, DNA, RNA chains (i)

There are no non-standard protein/DNA/RNA residues in this entry.

6.3 Carbohydrates (i)

There are no monosaccharides in this entry.

6.4 Ligands (i)

In the following table, the Atoms column lists the number of modelled atoms in the group and the number defined in the chemical component dictionary. The B-factors column lists the minimum, median, 95th percentile and maximum values of B factors of atoms in the group. The column labelled 'Q< 0.9' lists the number of atoms with occupancy less than 0.9.

Mol	Type	Chain	Res	Atoms	RSCC	RSR	B-factors(Å^2)	Q<0.9
4	CMP	A	779	22/22	0.80	0.21	41,42,42,43	0
2	ZN	A	777	1/1	0.91	0.46	33,33,33,33	0
2	ZN	B	777	1/1	0.92	0.38	34,34,34,34	0
3	MG	B	778	1/1	0.93	0.16	34,34,34,34	0
3	MG	A	778	1/1	0.94	0.07	28,28,28,28	0

The following is a graphical depiction of the model fit to experimental electron density of all

instances of the Ligand of Interest. In addition, ligands with molecular weight > 250 and outliers as shown on the geometry validation Tables will also be included. Each fit is shown from different orientation to approximate a three-dimensional view.

Electron density around CMP A 779:

$2mF_o$-DF_c (at 0.7 rmsd) in gray
mF_o-DF_c (at 3 rmsd) in purple (negative)
and green (positive)

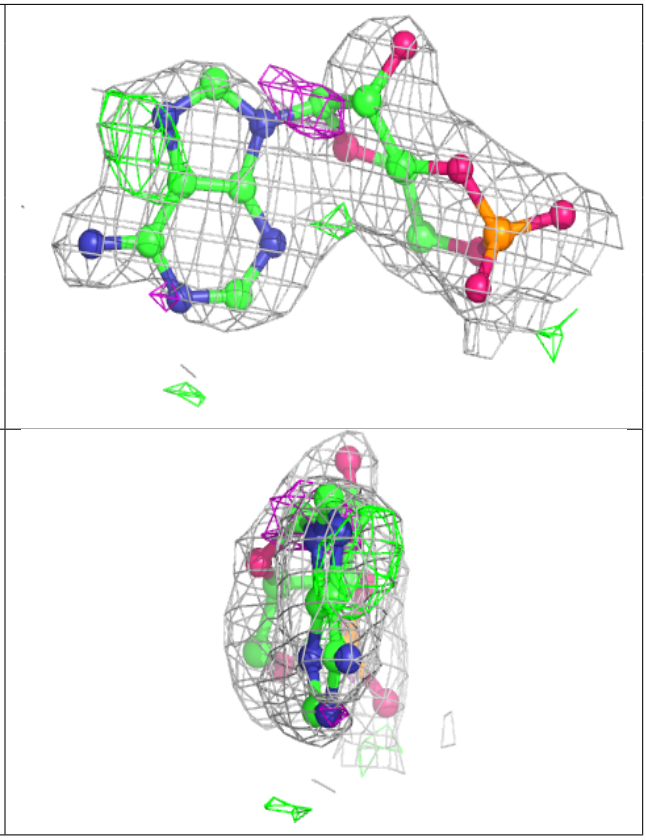

6.5 Other polymers (i)

There are no such residues in this entry.