Full wwPDB X-ray Structure Validation Report (i)

Jan 30, 2024 – 10:59 PM EST

PDB ID	:	1K3F
Title	:	Uridine Phosphorylase from E. coli, Refined in the Monoclinic Crystal Lattice
Authors	:	Morgunova, E.Yu.; Mikhailov, A.M.; Popov, A.N.; Blagova, E.V.; Smirnova, E.A.; Vainshtein, B.K.; Mao, C.; Armstrong, S.R.; Ealick, S.E.; Komissarov, A.A.; Linkova, E.V.; Burlakova, A.A.; Mironov, A.S.; Debabov, V.G.
Deposited on	:	2001-10-02
Resolution	:	2.50 Å(reported)

This is a Full wwPDB X-ray Structure Validation Report for a publicly released PDB entry.

We welcome your comments at *validation@mail.wwpdb.org*
A user guide is available at
https://www.wwpdb.org/validation/2017/XrayValidationReportHelp
with specific help available everywhere you see the (i) symbol.

The types of validation reports are described at
http://www.wwpdb.org/validation/2017/FAQs#types.

The following versions of software and data (see references (i)) were used in the production of this report:

MolProbity	:	4.02b-467
Xtriage (Phenix)	:	NOT EXECUTED
EDS	:	NOT EXECUTED
Percentile statistics	:	20191225.v01 (using entries in the PDB archive December 25th 2019)
Ideal geometry (proteins)	:	Engh & Huber (2001)
Ideal geometry (DNA, RNA)	:	Parkinson et al. (1996)
Validation Pipeline (wwPDB-VP)	:	2.36

1 Overall quality at a glance (i)

The following experimental techniques were used to determine the structure:
X-RAY DIFFRACTION

The reported resolution of this entry is 2.50 Å.

Percentile scores (ranging between 0-100) for global validation metrics of the entry are shown in the following graphic. The table shows the number of entries on which the scores are based.

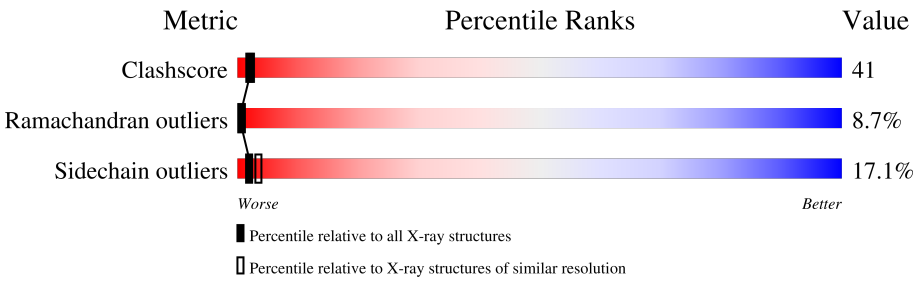

Metric	Whole archive (#Entries)	Similar resolution (#Entries, resolution range(Å))
Clashscore	141614	5346 (2.50-2.50)
Ramachandran outliers	138981	5231 (2.50-2.50)
Sidechain outliers	138945	5233 (2.50-2.50)

The table below summarises the geometric issues observed across the polymeric chains and their fit to the electron density. The red, orange, yellow and green segments of the lower bar indicate the fraction of residues that contain outliers for >=3, 2, 1 and 0 types of geometric quality criteria respectively. A grey segment represents the fraction of residues that are not modelled. The numeric value for each fraction is indicated below the corresponding segment, with a dot representing fractions <=5%

Note EDS was not executed.

Mol	Chain	Length	Quality of chain
1	A	253	45% 41% 11% •
1	B	253	39% 48% 13% •
1	C	253	37% 50% 11% •
1	D	253	38% 48% 14%
1	E	253	37% 46% 16% •
1	F	253	33% 51% 14% •

2 Entry composition (i)

There is only 1 type of molecule in this entry. The entry contains 11286 atoms, of which 0 are hydrogens and 0 are deuteriums.

In the tables below, the ZeroOcc column contains the number of atoms modelled with zero occupancy, the AltConf column contains the number of residues with at least one atom in alternate conformation and the Trace column contains the number of residues modelled with at most 2 atoms.

- Molecule 1 is a protein called uridine phosphorylase.

Mol	Chain	Residues	Atoms					ZeroOcc	AltConf	Trace
			Total	C	N	O	S			
1	A	253	1881	1180	322	367	12	0	0	0
1	B	253	1881	1180	322	367	12	0	0	0
1	C	253	1881	1180	322	367	12	0	0	0
1	D	253	1881	1180	322	367	12	0	0	0
1	E	253	1881	1180	322	367	12	0	0	0
1	F	253	1881	1180	322	367	12	0	0	0

3 Residue-property plots (i)

These plots are drawn for all protein, RNA, DNA and oligosaccharide chains in the entry. The first graphic for a chain summarises the proportions of the various outlier classes displayed in the second graphic. The second graphic shows the sequence view annotated by issues in geometry. Residues are color-coded according to the number of geometric quality criteria for which they contain at least one outlier: green = 0, yellow = 1, orange = 2 and red = 3 or more. Stretches of 2 or more consecutive residues without any outlier are shown as a green connector. Residues present in the sample, but not in the model, are shown in grey.

Note EDS was not executed.

• Molecule 1: uridine phosphorylase

Chain A: 45% 41% 11% •

• Molecule 1: uridine phosphorylase

Chain B: 39% 48% 13% •

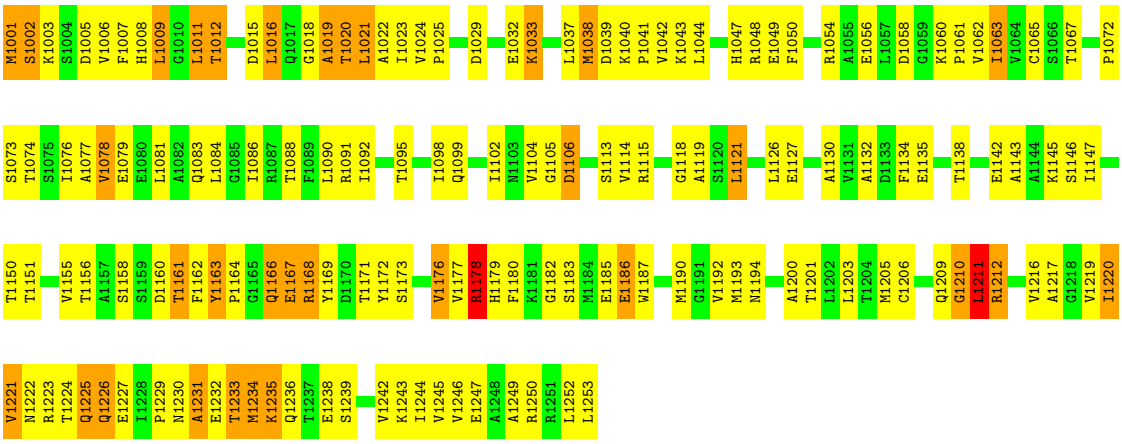

• Molecule 1: uridine phosphorylase

Chain C: 37% 50% 11% •

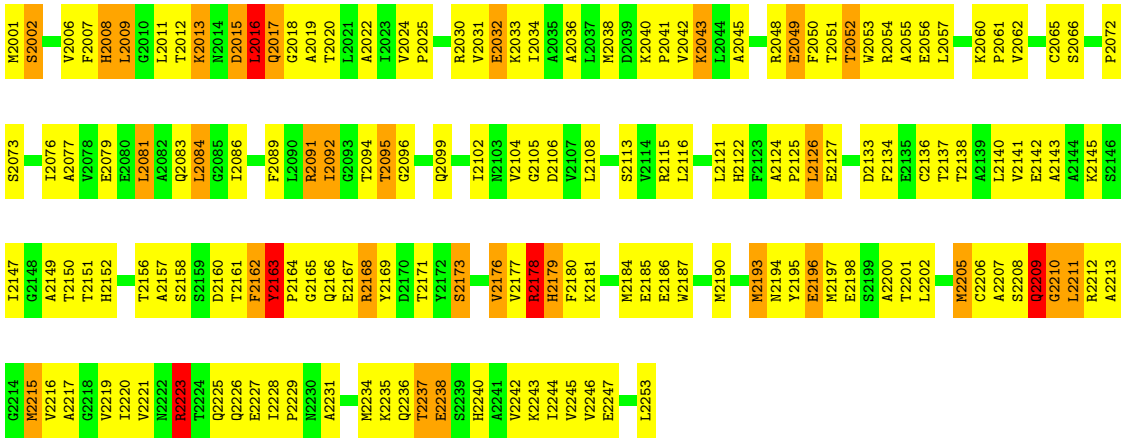

- Molecule 1: uridine phosphorylase

Chain D:

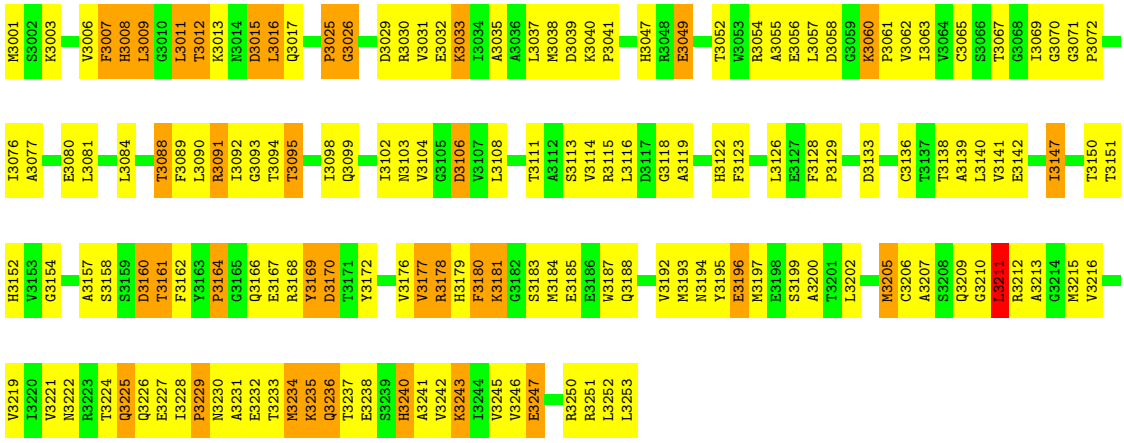

- Molecule 1: uridine phosphorylase

Chain E:

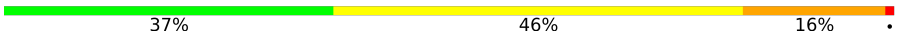

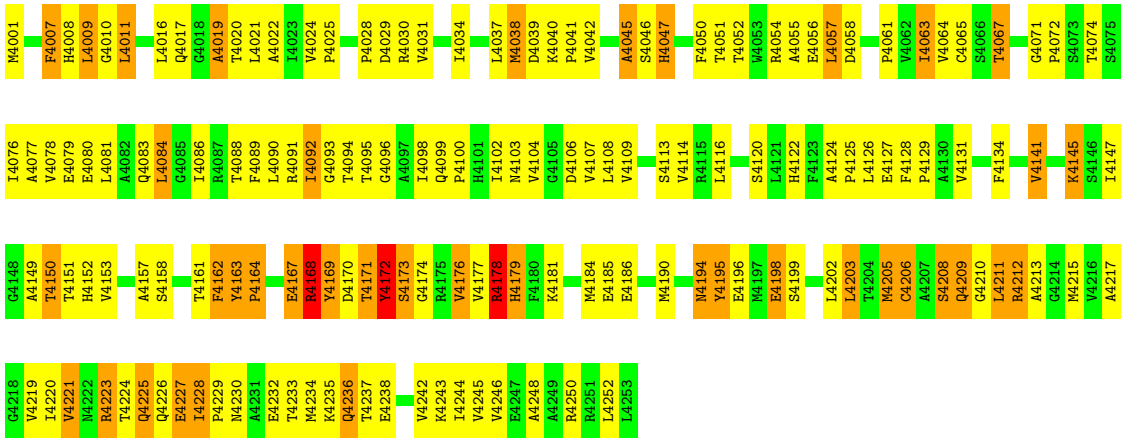

- Molecule 1: uridine phosphorylase

Chain F:

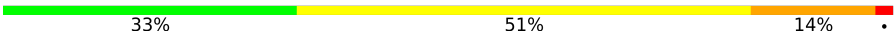
33%
51%
14%

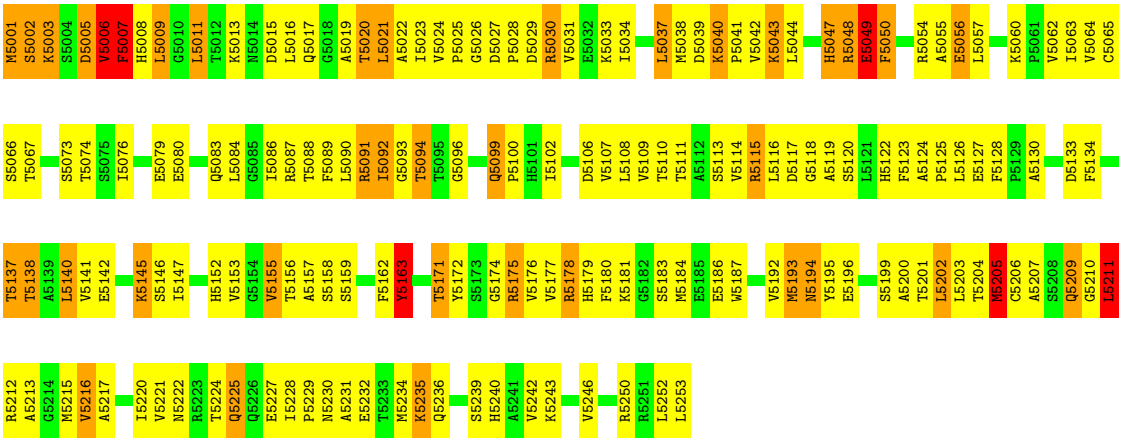
M5001 S5002 K5003 S5004 D5005 V5006 F5007 H5008 L5009 G5010 L5011 T5012 K5013 N5014 D5015 L5016 Q5017 G5018 A5019 T5020 L5021 A5022 I5023 V5024 P5025 G5026 D5027 P5028 D5029 R5030 V5031 E5032 K5033 I5034 L5037 M5038 D5039 K5040 P5041 V5042 K5043 L5044 H5047 R5048 E5049 F5050 R5054 A5055 E5056 L5057 K5060 P5061 V5062 I5063 V5064 C5065
S5066 T5067 S5073 T5074 S5075 I5076 E5079 E5080 Q5083 L5084 G5085 I5086 R5087 T5088 F5089 L5090 R5091 I5092 G5093 T5094 T5095 G5096 Q5099 P5100 H5101 I5102 D5106 V5107 L5108 V5109 T5110 T5111 A5112 S5113 V5114 R5115 L5116 D5117 G5118 A5119 S5120 L5121 H5122 F5123 A5124 P5125 L5126 E5127 F5128 P5129 A5130 D5133 F5134
T5137 T5138 A5139 L5140 V5141 E5142 K5145 S5146 I5147 H5152 V5153 G5154 V5155 T5156 A5157 S5158 S5159 F5162 Y5163 T5171 Y5172 S5173 G5174 R5175 V5176 V5177 R5178 H5179 F5180 K5181 G5182 S5183 M5184 E5185 E5186 W5187 V5192 M5193 N5194 Y5195 E5196 S5199 A5200 T5201 L5202 L5203 T5204 M5205 C5206 A5207 S5208 Q5209 G5210 L5211
R5212 A5213 G5214 M5215 V5216 A5217 I5220 V5221 N5222 R5223 T5224 Q5225 Q5226 E5227 I5228 P5229 N5230 A5231 E5232 T5233 M5234 K5235 Q5236 S5239 H5240 A5241 V5242 K5243 V5246 R5250 R5251 L5252 L5253

4 Data and refinement statistics (i)

Xtriage (Phenix) and EDS were not executed - this section is therefore incomplete.

Property	Value	Source
Space group	P 1 21 1	Depositor
Cell constants a, b, c, α, β, γ	92.60Å 98.80Å 93.70Å 90.00° 120.20° 90.00°	Depositor
Resolution (Å)	6.00 – 2.50	Depositor
% Data completeness (in resolution range)	(Not available) (6.00-2.50)	Depositor
R_{merge}	0.10	Depositor
R_{sym}	(Not available)	Depositor
Refinement program	X-PLOR 3.1	Depositor
R, R_{free}	0.186 , (Not available)	Depositor
Estimated twinning fraction	No twinning to report.	Xtriage
Total number of atoms	11286	wwPDB-VP
Average B, all atoms (Å^2)	15.0	wwPDB-VP

5 Model quality (i)

5.1 Standard geometry (i)

The Z score for a bond length (or angle) is the number of standard deviations the observed value is removed from the expected value. A bond length (or angle) with $|Z| > 5$ is considered an outlier worth inspection. RMSZ is the root-mean-square of all Z scores of the bond lengths (or angles).

Mol	Chain	Bond lengths		Bond angles	
		RMSZ	#$\|Z\|$ >5	RMSZ	#$\|Z\|$ >5
1	A	0.68	1/1913 (0.1%)	0.95	3/2599 (0.1%)
1	B	0.62	0/1913	0.92	2/2599 (0.1%)
1	C	0.69	1/1913 (0.1%)	0.91	0/2599
1	D	0.65	0/1913	0.94	1/2599 (0.0%)
1	E	0.67	0/1913	0.92	5/2599 (0.2%)
1	F	2.39	8/1913 (0.4%)	1.02	5/2599 (0.2%)
All	All	1.15	10/11478 (0.1%)	0.94	16/15594 (0.1%)

All (10) bond length outliers are listed below:

Mol	Chain	Res	Type	Atoms	Z	Observed(Å)	Ideal(Å)
1	F	5007	PHE	CE1-CZ	45.72	2.24	1.37
1	F	5007	PHE	CE2-CZ	45.69	2.24	1.37
1	F	5007	PHE	CD2-CE2	44.49	2.28	1.39
1	F	5007	PHE	CD1-CE1	44.03	2.27	1.39
1	F	5007	PHE	CG-CD2	29.57	1.83	1.38
1	F	5007	PHE	CG-CD1	29.14	1.82	1.38
1	F	5002	SER	N-CA	14.75	1.75	1.46
1	F	5001	MET	C-N	6.75	1.49	1.34
1	A	205	MET	CG-SD	5.30	1.95	1.81
1	C	2185	GLU	CG-CD	5.05	1.59	1.51

All (16) bond angle outliers are listed below:

Mol	Chain	Res	Type	Atoms	Z	Observed(^{o})	Ideal(^{o})
1	F	5001	MET	C-N-CA	15.24	159.80	121.70
1	F	5007	PHE	CB-CG-CD1	-9.44	114.19	120.80
1	A	211	LEU	CA-CB-CG	6.32	129.84	115.30
1	E	4170	ASP	N-CA-C	6.25	127.87	111.00
1	A	16	LEU	CA-CB-CG	6.14	129.42	115.30
1	E	4090	LEU	CA-CB-CG	6.05	129.21	115.30
1	E	4057	LEU	N-CA-C	-5.94	94.97	111.00
1	E	4057	LEU	CA-CB-CG	5.85	128.76	115.30

Continued on next page...

Continued from previous page...

Mol	Chain	Res	Type	Atoms	Z	Observed(^{o})	Ideal(^{o})
1	F	5007	PHE	CD1-CG-CD2	5.69	125.69	118.30
1	F	5202	LEU	CA-CB-CG	5.46	127.87	115.30
1	B	1130	ALA	N-CA-C	-5.35	96.55	111.00
1	D	3211	LEU	CA-CB-CG	5.22	127.32	115.30
1	F	5205	MET	N-CA-C	-5.21	96.93	111.00
1	A	10	GLY	N-CA-C	5.12	125.90	113.10
1	B	1081	LEU	CA-CB-CG	5.11	127.05	115.30
1	E	4167	GLU	N-CA-C	-5.10	97.23	111.00

There are no chirality outliers.

There are no planarity outliers.

5.2 Too-close contacts (i)

In the following table, the Non-H and H(model) columns list the number of non-hydrogen atoms and hydrogen atoms in the chain respectively. The H(added) column lists the number of hydrogen atoms added and optimized by MolProbity. The Clashes column lists the number of clashes within the asymmetric unit, whereas Symm-Clashes lists symmetry-related clashes.

Mol	Chain	Non-H	H(model)	H(added)	Clashes	Symm-Clashes
1	A	1881	0	1871	155	0
1	B	1881	0	1868	145	0
1	C	1881	0	1868	180	0
1	D	1881	0	1868	151	0
1	E	1881	0	1868	154	0
1	F	1881	0	1868	214	0
All	All	11286	0	11211	929	0

The all-atom clashscore is defined as the number of clashes found per 1000 atoms (including hydrogen atoms). The all-atom clashscore for this structure is 41.

All (929) close contacts within the same asymmetric unit are listed below, sorted by their clash magnitude.

Atom-1	Atom-2	Interatomic distance (Å)	Clash overlap (Å)
1:F:5007:PHE:CD1	1:F:5007:PHE:CG	1.82	1.67
1:F:5007:PHE:CG	1:F:5007:PHE:CD2	1.83	1.60
1:F:5002:SER:N	1:F:5002:SER:CA	1.75	1.48
1:F:5007:PHE:CZ	1:F:5007:PHE:CE1	2.24	1.26
1:F:5007:PHE:CZ	1:F:5007:PHE:CE2	2.24	1.25
1:F:5002:SER:N	1:F:5007:PHE:CE1	2.07	1.22

Continued on next page...

Continued from previous page...

Atom-1	Atom-2	Interatomic distance (Å)	Clash overlap (Å)
1:F:5007:PHE:CD2	1:F:5007:PHE:CE2	2.28	1.22
1:F:5007:PHE:CD1	1:F:5007:PHE:CE1	2.27	1.22
1:F:5002:SER:N	1:F:5007:PHE:CZ	2.08	1.22
1:F:5002:SER:N	1:F:5007:PHE:CE2	2.09	1.20
1:F:5002:SER:HA	1:F:5007:PHE:CD2	1.75	1.19
1:F:5002:SER:N	1:F:5007:PHE:CD1	2.10	1.19
1:A:225:GLN:HB2	1:D:3001:MET:SD	1.86	1.15
1:D:3228:ILE:HG12	1:D:3229:PRO:HA	1.17	1.14
1:F:5002:SER:N	1:F:5007:PHE:CD2	2.16	1.12
1:F:5205:MET:SD	1:F:5205:MET:N	2.21	1.12
1:C:2229:PRO:HG2	1:C:2234:MET:HG2	1.22	1.12
1:A:1:MET:SD	1:D:3229:PRO:HD3	1.94	1.08
1:D:3234:MET:SD	1:D:3234:MET:N	2.26	1.08
1:F:5002:SER:N	1:F:5007:PHE:CG	2.21	1.08
1:A:228:ILE:HB	1:A:229:PRO:HA	1.41	1.03
1:F:5002:SER:CA	1:F:5007:PHE:CD2	2.45	1.00
1:A:178:ARG:HH22	1:B:1186:GLU:HB3	1.27	0.98
1:C:2211:LEU:HG	1:C:2212:ARG:H	1.31	0.96
1:C:2220:ILE:HG13	1:C:2221:VAL:HG23	1.47	0.96
1:C:2001:MET:N	1:E:4223:ARG:HA	1.81	0.95
1:A:9:LEU:HG	1:A:50:PHE:CD1	2.03	0.93
1:A:220:ILE:HG13	1:A:221:VAL:HG22	1.51	0.92
1:A:9:LEU:HG	1:A:50:PHE:CE1	2.04	0.91
1:C:2137:THR:O	1:C:2141:VAL:HG13	1.71	0.91
1:F:5201:THR:O	1:F:5205:MET:SD	2.28	0.91
1:F:5130:ALA:HB1	1:F:5203:LEU:HB2	1.53	0.91
1:F:5109:VAL:HG13	1:F:5140:LEU:HD12	1.52	0.90
1:C:2126:LEU:HD23	1:F:5126:LEU:HD23	1.53	0.89
1:F:5201:THR:HA	1:F:5205:MET:HE1	1.54	0.88
1:C:2105:GLY:HA2	1:C:2237:THR:OG1	1.73	0.88
1:D:3039:ASP:HB2	1:D:3056:GLU:HB3	1.54	0.87
1:E:4178:ARG:HA	1:E:4181:LYS:HE2	1.55	0.87
1:F:5001:MET:C	1:F:5007:PHE:CD2	2.48	0.87
1:A:31:VAL:HG13	1:A:64:VAL:HG22	1.57	0.86
1:E:4176:VAL:HG12	1:E:4177:VAL:H	1.41	0.86
1:F:5091:ARG:HG2	1:F:5215:MET:HG3	1.57	0.86
1:D:3017:GLN:CD	1:D:3054:ARG:HD2	1.97	0.85
1:F:5002:SER:CA	1:F:5007:PHE:CG	2.59	0.85
1:F:5022:ALA:HB2	1:F:5086:ILE:HD13	1.58	0.85
1:B:1134:PHE:O	1:B:1138:THR:HG23	1.75	0.84
1:C:2178:ARG:CZ	1:E:4125:PRO:HG3	2.07	0.84

Continued on next page...

Continued from previous page...

Atom-1	Atom-2	Interatomic distance (Å)	Clash overlap (Å)
1:D:3233:THR:OG1	1:D:3234:MET:SD	2.35	0.84
1:F:5141:VAL:O	1:F:5145:LYS:HG2	1.77	0.84
1:F:5100:PRO:HB3	1:F:5224:THR:HG21	1.59	0.84
1:F:5002:SER:CA	1:F:5007:PHE:CE2	2.60	0.83
1:F:5120:SER:HA	1:F:5205:MET:HE3	1.62	0.82
1:F:5001:MET:O	1:F:5007:PHE:CD2	2.32	0.82
1:F:5001:MET:HA	1:F:5007:PHE:CE1	2.13	0.82
1:E:4104:VAL:HG21	1:E:4229:PRO:HG3	1.61	0.82
1:C:2205:MET:SD	1:C:2205:MET:C	2.59	0.81
1:A:225:GLN:CB	1:D:3001:MET:SD	2.68	0.81
1:A:125:PRO:HB3	1:D:3178:ARG:HG2	1.63	0.81
1:D:3038:MET:SD	1:D:3062:VAL:HG21	2.20	0.81
1:B:1243:LYS:O	1:B:1247:GLU:HG2	1.81	0.81
1:D:3241:ALA:O	1:D:3245:VAL:HG23	1.81	0.80
1:E:4212:ARG:HH11	1:E:4252:LEU:HD23	1.46	0.80
1:D:3211:LEU:HG	1:D:3212:ARG:H	1.47	0.80
1:A:228:ILE:HB	1:A:229:PRO:CA	2.12	0.80
1:C:2211:LEU:HG	1:C:2212:ARG:N	1.96	0.80
1:D:3016:LEU:HD13	1:D:3063:ILE:HG13	1.65	0.79
1:F:5001:MET:C	1:F:5007:PHE:CG	2.55	0.79
1:D:3180:PHE:HD2	1:D:3181:LYS:H	1.31	0.79
1:F:5001:MET:C	1:F:5007:PHE:CE2	2.55	0.79
1:B:1002:SER:HA	1:B:1008:HIS:HA	1.64	0.78
1:C:2017:GLN:OE1	1:C:2061:PRO:HG3	1.83	0.78
1:E:4167:GLU:HG3	1:E:4184:MET:HG3	1.65	0.78
1:B:1063:ILE:HD11	1:B:1065:CYS:HB2	1.64	0.78
1:B:1235:LYS:H	1:B:1235:LYS:HD3	1.49	0.78
1:F:5114:VAL:HG22	1:F:5157:ALA:HA	1.65	0.78
1:B:1158:SER:HB3	1:B:1200:ALA:HB2	1.65	0.77
1:D:3009:LEU:HD12	1:D:3047:HIS:HB3	1.66	0.77
1:F:5040:LYS:N	1:F:5041:PRO:HD3	1.98	0.77
1:C:2002:SER:HB2	1:E:4226:GLN:HE21	1.49	0.76
1:A:226:GLN:CA	1:D:3001:MET:HB2	2.15	0.76
1:F:5002:SER:HB2	1:F:5007:PHE:CZ	2.20	0.76
1:A:11:LEU:HD13	1:A:15:ASP:HB2	1.67	0.76
1:D:3161:THR:HG22	1:D:3162:PHE:H	1.51	0.76
1:C:2173:SER:OG	1:C:2176:VAL:HA	1.85	0.75
1:A:242:VAL:HA	1:A:245:VAL:HG12	1.67	0.75
1:F:5001:MET:C	1:F:5007:PHE:CD1	2.60	0.75
1:D:3030:ARG:HH21	1:D:3238:GLU:HG3	1.50	0.75
1:F:5120:SER:HA	1:F:5205:MET:CE	2.17	0.75

Continued on next page...

Continued from previous page...

Atom-1	Atom-2	Interatomic distance (Å)	Clash overlap (Å)
1:C:2011:LEU:HD21	1:C:2052:THR:HG21	1.67	0.74
1:C:2016:LEU:HD23	1:C:2016:LEU:H	1.50	0.74
1:D:3012:THR:O	1:D:3015:ASP:HB2	1.88	0.74
1:A:136:CYS:O	1:A:140:LEU:HD13	1.88	0.74
1:C:2223:ARG:H	1:C:2223:ARG:HD2	1.53	0.73
1:B:1074:THR:HG22	1:B:1078:VAL:HG21	1.70	0.73
1:E:4210:GLY:O	1:E:4212:ARG:N	2.22	0.73
1:C:2179:HIS:CD2	1:C:2179:HIS:H	2.05	0.72
1:F:5204:THR:C	1:F:5205:MET:SD	2.68	0.72
1:E:4011:LEU:HB3	1:E:4084:LEU:HD21	1.69	0.72
1:E:4078:VAL:HG11	1:E:4205:MET:SD	2.30	0.72
1:B:1044:LEU:HD22	1:B:1054:ARG:HB2	1.71	0.72
1:F:5236:GLN:HA	1:F:5239:SER:OG	1.89	0.72
1:C:2025:PRO:HD2	1:C:2065:CYS:O	1.90	0.71
1:D:3026:GLY:HA2	1:D:3067:THR:OG1	1.90	0.71
1:D:3038:MET:SD	1:D:3062:VAL:CG2	2.79	0.71
1:C:2167:GLU:CG	1:C:2223:ARG:HG2	2.21	0.71
1:D:3123:PHE:CD2	1:D:3205:MET:SD	2.84	0.71
1:D:3238:GLU:O	1:D:3242:VAL:HG23	1.89	0.71
1:C:2104:VAL:HG11	1:C:2229:PRO:HB3	1.73	0.71
1:F:5037:LEU:HD13	1:F:5246:VAL:HG21	1.73	0.71
1:D:3017:GLN:NE2	1:D:3054:ARG:HD2	2.05	0.71
1:A:226:GLN:HA	1:D:3001:MET:HB2	1.71	0.70
1:B:1025:PRO:HD2	1:B:1065:CYS:O	1.91	0.70
1:A:178:ARG:NH2	1:B:1186:GLU:HB3	2.04	0.70
1:D:3030:ARG:NH2	1:D:3238:GLU:HG3	2.06	0.70
1:D:3228:ILE:CG1	1:D:3229:PRO:HA	2.10	0.70
1:C:2235:LYS:HA	1:C:2238:GLU:HG3	1.73	0.70
1:D:3123:PHE:CE2	1:D:3205:MET:SD	2.85	0.70
1:C:2177:VAL:HB	1:C:2181:LYS:HD3	1.73	0.70
1:D:3247:GLU:O	1:D:3250:ARG:HG2	1.92	0.70
1:E:4072:PRO:O	1:E:4076:ILE:HG13	1.91	0.70
1:A:226:GLN:HA	1:D:3001:MET:CB	2.20	0.70
1:D:3038:MET:HB2	1:D:3055:ALA:HB1	1.74	0.70
1:E:4102:ILE:HG21	1:E:4108:LEU:HD21	1.72	0.70
1:F:5002:SER:CA	1:F:5007:PHE:CD1	2.73	0.70
1:F:5201:THR:HG23	1:F:5205:MET:HE2	1.71	0.69
1:F:5163:TYR:HD1	1:F:5163:TYR:H	1.40	0.69
1:F:5001:MET:CA	1:F:5007:PHE:CE1	2.75	0.69
1:A:167:GLU:OE1	1:A:223:ARG:HD3	1.93	0.69
1:B:1242:VAL:O	1:B:1245:VAL:HG12	1.93	0.69

Continued on next page...

Continued from previous page...

Atom-1	Atom-2	Interatomic distance (Å)	Clash overlap (Å)
1:F:5205:MET:O	1:F:5206:CYS:HB2	1.92	0.69
1:C:2207:ALA:N	1:C:2211:LEU:HD13	2.08	0.69
1:D:3008:HIS:HB3	1:D:3080:GLU:OE2	1.93	0.69
1:D:3091:ARG:HB3	1:D:3215:MET:HG3	1.74	0.69
1:F:5025:PRO:HD2	1:F:5065:CYS:O	1.93	0.69
1:F:5119:ALA:HB3	1:F:5201:THR:OG1	1.93	0.69
1:C:2176:VAL:HG23	1:C:2177:VAL:H	1.58	0.68
1:A:23:ILE:HG22	1:A:25:PRO:HD3	1.75	0.68
1:B:1012:THR:HG23	1:B:1015:ASP:OD1	1.93	0.68
1:D:3077:ALA:O	1:D:3081:LEU:HD13	1.93	0.68
1:F:5002:SER:C	1:F:5007:PHE:CD1	2.66	0.68
1:B:1115:ARG:HH21	1:B:1121:LEU:HD22	1.59	0.68
1:D:3038:MET:HB3	1:D:3056:GLU:O	1.93	0.68
1:B:1176:VAL:HG23	1:B:1177:VAL:H	1.58	0.68
1:C:2136:CYS:O	1:C:2140:LEU:HD12	1.94	0.68
1:F:5240:HIS:HA	1:F:5243:LYS:HE2	1.76	0.68
1:E:4089:PHE:O	1:E:4213:ALA:HA	1.93	0.68
1:C:2178:ARG:HB3	1:C:2179:HIS:HD2	1.58	0.68
1:D:3136:CYS:O	1:D:3140:LEU:HG	1.94	0.68
1:D:3162:PHE:O	1:D:3164:PRO:HD3	1.93	0.68
1:C:2167:GLU:HG2	1:C:2223:ARG:HG2	1.73	0.67
1:F:5007:PHE:CD2	1:F:5007:PHE:O	2.48	0.67
1:C:2104:VAL:HG11	1:C:2229:PRO:HG3	1.75	0.67
1:C:2115:ARG:O	1:C:2116:LEU:HD23	1.95	0.67
1:C:2210:GLY:O	1:C:2211:LEU:HB3	1.92	0.67
1:F:5114:VAL:HG23	1:F:5116:LEU:HG	1.77	0.67
1:A:1:MET:SD	1:D:3229:PRO:CD	2.79	0.67
1:C:2043:LYS:HE2	1:C:2053:TRP:NE1	2.10	0.67
1:B:1003:LYS:CB	1:B:1007:PHE:HB2	2.25	0.66
1:D:3103:ASN:O	1:D:3106:ASP:HB2	1.94	0.66
1:F:5002:SER:CB	1:F:5007:PHE:CZ	2.77	0.66
1:C:2031:VAL:HG21	1:C:2066:SER:HB2	1.76	0.66
1:E:4039:ASP:HB2	1:E:4056:GLU:HB2	1.77	0.66
1:F:5091:ARG:HG2	1:F:5215:MET:CG	2.25	0.66
1:D:3029:ASP:O	1:D:3033:LYS:HG2	1.95	0.66
1:E:4212:ARG:NH1	1:E:4252:LEU:HD23	2.09	0.66
1:E:4145:LYS:HE2	1:E:4145:LYS:HA	1.78	0.65
1:C:2141:VAL:HG21	1:F:5134:PHE:CE1	2.32	0.65
1:D:3235:LYS:HD2	1:D:3235:LYS:O	1.96	0.65
1:F:5140:LEU:HD13	1:F:5216:VAL:HB	1.78	0.65
1:C:2024:VAL:O	1:C:2091:ARG:HG3	1.97	0.65

Continued on next page...

Continued from previous page...

Atom-1	Atom-2	Interatomic distance (Å)	Clash overlap (Å)
1:C:2079:GLU:O	1:C:2083:GLN:HG2	1.96	0.65
1:E:4171:THR:O	1:E:4172:TYR:HB2	1.95	0.65
1:B:1210:GLY:O	1:B:1211:LEU:HB2	1.97	0.65
1:D:3183:SER:HA	1:D:3187:TRP:HD1	1.62	0.65
1:F:5183:SER:HA	1:F:5186:GLU:HG3	1.78	0.65
1:C:2099:GLN:HB2	1:C:2102:ILE:HD12	1.77	0.65
1:C:2178:ARG:NH2	1:E:4125:PRO:HG3	2.12	0.65
1:D:3106:ASP:OD2	1:D:3150:THR:HB	1.96	0.65
1:B:1072:PRO:O	1:B:1076:ILE:HG13	1.97	0.64
1:C:2179:HIS:H	1:C:2179:HIS:HD2	1.43	0.64
1:F:5111:THR:HG23	1:F:5153:VAL:HG12	1.79	0.64
1:B:1104:VAL:HG13	1:B:1220:ILE:HA	1.79	0.64
1:C:2206:CYS:O	1:C:2211:LEU:HB2	1.97	0.64
1:D:3138:THR:HA	1:D:3141:VAL:HG22	1.77	0.64
1:E:4067:THR:HG22	1:E:4077:ALA:HB3	1.80	0.64
1:F:5212:ARG:NH1	1:F:5252:LEU:HD22	2.12	0.64
1:B:1121:LEU:O	1:F:5177:VAL:HG11	1.98	0.64
1:E:4034:ILE:HG12	1:E:4242:VAL:HG13	1.80	0.64
1:F:5011:LEU:HD11	1:F:5016:LEU:HD21	1.79	0.64
1:D:3161:THR:HG22	1:D:3162:PHE:N	2.12	0.64
1:D:3178:ARG:HG3	1:D:3179:HIS:ND1	2.12	0.63
1:F:5022:ALA:HB2	1:F:5086:ILE:CD1	2.28	0.63
1:F:5030:ARG:HA	1:F:5033:LYS:HE3	1.80	0.63
1:A:11:LEU:HD11	1:A:16:LEU:HD23	1.81	0.63
1:D:3025:PRO:HD2	1:D:3065:CYS:O	1.98	0.63
1:F:5002:SER:HA	1:F:5007:PHE:CG	2.33	0.63
1:C:2104:VAL:HG11	1:C:2229:PRO:CB	2.28	0.63
1:C:2167:GLU:HA	1:C:2184:MET:CE	2.28	0.63
1:A:72:PRO:HB2	1:D:3069:ILE:HG22	1.81	0.63
1:B:1001:MET:HG3	1:B:1009:LEU:HD23	1.79	0.63
1:B:1022:ALA:HB2	1:B:1086:ILE:HG21	1.81	0.63
1:F:5001:MET:C	1:F:5007:PHE:CZ	2.72	0.63
1:B:1178:ARG:NH2	1:B:1179:HIS:HB3	2.14	0.63
1:C:2167:GLU:HA	1:C:2184:MET:HE3	1.79	0.63
1:E:4202:LEU:O	1:E:4205:MET:O	2.16	0.63
1:F:5042:VAL:HG21	1:F:5054:ARG:HH21	1.63	0.63
1:F:5209:GLN:HG3	1:F:5209:GLN:O	1.99	0.63
1:C:2126:LEU:HD23	1:F:5126:LEU:CD2	2.28	0.63
1:E:4096:GLY:HA3	1:E:4221:VAL:HG12	1.81	0.63
1:F:5034:ILE:O	1:F:5037:LEU:HD12	1.98	0.62
1:B:1209:GLN:O	1:B:1211:LEU:N	2.32	0.62

Continued on next page...

Continued from previous page...

Atom-1	Atom-2	Interatomic distance (Å)	Clash overlap (Å)
1:D:3007:PHE:O	1:D:3009:LEU:N	2.32	0.62
1:D:3091:ARG:HG2	1:D:3215:MET:HG3	1.80	0.62
1:F:5155:VAL:O	1:F:5192:VAL:HG13	1.99	0.62
1:F:5002:SER:N	1:F:5002:SER:HA	2.06	0.62
1:C:2223:ARG:HD2	1:C:2223:ARG:N	2.14	0.62
1:A:14:ASN:O	1:A:17:GLN:HG2	1.99	0.62
1:B:1226:GLN:HE21	1:B:1226:GLN:HA	1.63	0.62
1:E:4040:LYS:N	1:E:4041:PRO:HD3	2.13	0.62
1:D:3147:ILE:HD11	1:D:3243:LYS:HD2	1.79	0.62
1:A:108:LEU:HA	1:A:152:HIS:O	1.99	0.62
1:C:2041:PRO:HA	1:C:2054:ARG:O	1.99	0.62
1:D:3183:SER:HB3	1:D:3195:TYR:OH	1.99	0.62
1:F:5123:PHE:CD1	1:F:5205:MET:HG3	2.34	0.62
1:F:5007:PHE:O	1:F:5007:PHE:HD2	1.80	0.62
1:C:2205:MET:SD	1:C:2205:MET:O	2.58	0.61
1:D:3037:LEU:HD23	1:D:3246:VAL:HG21	1.81	0.61
1:E:4094:THR:HB	1:E:4220:ILE:CG2	2.30	0.61
1:A:83:GLN:HG3	1:D:3172:TYR:CZ	2.35	0.61
1:B:1060:LYS:HG3	1:B:1253:LEU:HB3	1.83	0.61
1:F:5204:THR:HB	1:F:5205:MET:SD	2.40	0.61
1:B:1016:LEU:HD23	1:B:1084:LEU:HD13	1.82	0.61
1:A:147:ILE:HG22	1:A:147:ILE:O	2.00	0.61
1:A:225:GLN:HB2	1:D:3001:MET:CE	2.29	0.61
1:F:5013:LYS:HA	1:F:5084:LEU:HD22	1.80	0.61
1:B:1163:TYR:N	1:B:1163:TYR:CD1	2.68	0.61
1:B:1233:THR:HA	1:B:1236:GLN:HE21	1.65	0.61
1:F:5002:SER:CA	1:F:5002:SER:H	2.03	0.61
1:C:2051:THR:H	1:C:2066:SER:HB3	1.66	0.60
1:E:4235:LYS:CG	1:E:4236:GLN:H	2.14	0.60
1:B:1008:HIS:CD2	1:B:1076:ILE:HG21	2.36	0.60
1:A:225:GLN:C	1:D:3001:MET:SD	2.80	0.60
1:B:1177:VAL:CG1	1:B:1180:PHE:HB2	2.31	0.60
1:C:2234:MET:O	1:C:2237:THR:HB	2.01	0.60
1:B:1113:SER:OG	1:B:1203:LEU:HD12	2.02	0.60
1:B:1158:SER:CB	1:B:1200:ALA:HB2	2.32	0.60
1:E:4238:GLU:O	1:E:4242:VAL:HG23	2.02	0.60
1:A:163:TYR:CE2	1:A:223:ARG:NH1	2.69	0.60
1:F:5001:MET:C	1:F:5007:PHE:CE1	2.74	0.60
1:B:1132:ALA:HB2	1:B:1203:LEU:HD22	1.84	0.59
1:B:1156:THR:HG23	1:B:1194:ASN:OD1	2.02	0.59
1:C:2060:LYS:HB2	1:C:2253:LEU:HD13	1.84	0.59

Continued on next page...

Continued from previous page...

Atom-1	Atom-2	Interatomic distance (Å)	Clash overlap (Å)
1:B:1019:ALA:HB1	1:B:1086:ILE:HD12	1.84	0.59
1:B:1180:PHE:HA	1:B:1183:SER:HB3	1.83	0.59
1:C:2104:VAL:HG11	1:C:2229:PRO:CG	2.31	0.59
1:C:2106:ASP:OD1	1:C:2152:HIS:HE1	1.85	0.59
1:C:2158:SER:HA	1:C:2196:GLU:O	2.01	0.59
1:F:5019:ALA:O	1:F:5020:THR:HB	2.02	0.59
1:B:1190:MET:HG2	1:D:3128:PHE:CE2	2.37	0.59
1:E:4016:LEU:N	1:E:4016:LEU:HD22	2.18	0.59
1:D:3006:VAL:HG23	1:D:3007:PHE:H	1.67	0.59
1:A:112:ALA:HB1	1:A:130:ALA:O	2.03	0.59
1:B:1205:MET:O	1:B:1209:GLN:HG3	2.01	0.59
1:B:1238:GLU:O	1:B:1242:VAL:HG22	2.03	0.59
1:D:3207:ALA:HA	1:D:3211:LEU:HD22	1.83	0.59
1:F:5042:VAL:HG12	1:F:5043:LYS:O	2.03	0.59
1:E:4141:VAL:HG22	1:E:4151:THR:HG21	1.85	0.58
1:D:3016:LEU:HA	1:D:3063:ILE:HD11	1.85	0.58
1:E:4104:VAL:HG12	1:E:4233:THR:HG21	1.85	0.58
1:E:4078:VAL:HB	1:E:4205:MET:SD	2.44	0.58
1:E:4248:ALA:O	1:E:4252:LEU:HD12	2.04	0.58
1:B:1005:ASP:HB2	1:B:1007:PHE:CE2	2.38	0.58
1:B:1135:GLU:HB3	1:B:1212:ARG:HH11	1.69	0.58
1:E:4104:VAL:HA	1:E:4219:VAL:HG12	1.85	0.58
1:E:4078:VAL:CG1	1:E:4205:MET:SD	2.92	0.58
1:F:5183:SER:HA	1:F:5186:GLU:CG	2.33	0.58
1:E:4058:ASP:CG	1:E:4250:ARG:HD2	2.24	0.58
1:A:196:GLU:HG3	1:A:197:MET:H	1.69	0.58
1:E:4007:PHE:CG	1:E:4008:HIS:N	2.72	0.58
1:F:5024:VAL:HB	1:F:5067:THR:HG23	1.84	0.58
1:A:114:VAL:HG22	1:E:4129:PRO:HD3	1.86	0.57
1:A:143:ALA:O	1:A:147:ILE:HG12	2.04	0.57
1:D:3108:LEU:HB3	1:D:3193:MET:HE3	1.85	0.57
1:E:4232:GLU:O	1:E:4235:LYS:HG2	2.04	0.57
1:E:4235:LYS:HG3	1:E:4236:GLN:H	1.69	0.57
1:F:5123:PHE:HD1	1:F:5205:MET:HE3	1.69	0.57
1:B:1077:ALA:O	1:B:1078:VAL:HG23	2.04	0.57
1:B:1162:PHE:HB2	1:F:5076:ILE:HD11	1.86	0.57
1:F:5002:SER:CA	1:F:5007:PHE:CZ	2.87	0.57
1:F:5230:ASN:O	1:F:5232:GLU:HG3	2.04	0.57
1:C:2091:ARG:O	1:C:2216:VAL:HG12	2.04	0.57
1:F:5011:LEU:HD12	1:F:5015:ASP:HB2	1.86	0.57
1:C:2242:VAL:O	1:C:2246:VAL:HG23	2.04	0.57

Continued on next page...

Continued from previous page...

Atom-1	Atom-2	Interatomic distance (Å)	Clash overlap (Å)
1:F:5222:ASN:HB3	1:F:5225:GLN:OE1	2.04	0.57
1:D:3006:VAL:HG23	1:D:3007:PHE:N	2.20	0.57
1:A:11:LEU:CD1	1:A:15:ASP:HB2	2.35	0.57
1:A:207:ALA:HA	1:A:211:LEU:HB3	1.87	0.57
1:C:2034:ILE:HG12	1:C:2242:VAL:HG13	1.87	0.57
1:C:2206:CYS:HB3	1:C:2211:LEU:HA	1.87	0.57
1:B:1234:MET:HB2	1:B:1235:LYS:HD3	1.85	0.57
1:C:2158:SER:OG	1:C:2200:ALA:HB2	2.05	0.56
1:C:2178:ARG:HE	1:C:2179:HIS:CD2	2.22	0.56
1:E:4219:VAL:O	1:E:4237:THR:HG21	2.05	0.56
1:A:11:LEU:HD23	1:A:11:LEU:H	1.70	0.56
1:A:114:VAL:HG11	1:A:187:TRP:CZ3	2.39	0.56
1:A:225:GLN:CA	1:D:3001:MET:SD	2.93	0.56
1:C:2208:SER:O	1:C:2209:GLN:HB3	2.05	0.56
1:E:4086:ILE:HD12	1:E:4086:ILE:H	1.70	0.56
1:E:4172:TYR:HD2	1:E:4173:SER:H	1.53	0.56
1:F:5002:SER:CB	1:F:5007:PHE:CE2	2.89	0.56
1:A:35:ALA:HB2	1:A:64:VAL:HG11	1.86	0.56
1:E:4009:LEU:HD22	1:E:4080:GLU:HB2	1.88	0.56
1:A:238:GLU:O	1:A:242:VAL:HG23	2.06	0.56
1:B:1023:ILE:HD12	1:B:1023:ILE:N	2.21	0.56
1:D:3102:ILE:O	1:D:3222:ASN:ND2	2.38	0.56
1:E:4094:THR:HB	1:E:4220:ILE:HG23	1.86	0.56
1:E:4098:ILE:O	1:E:4224:THR:HG21	2.06	0.56
1:B:1119:ALA:HB3	1:B:1201:THR:OG1	2.06	0.56
1:D:3142:GLU:HB3	1:D:3251:ARG:NH1	2.21	0.56
1:F:5007:PHE:CD1	1:F:5007:PHE:CB	2.81	0.56
1:F:5106:ASP:OD1	1:F:5152:HIS:HE1	1.89	0.56
1:C:2091:ARG:HD3	1:C:2202:LEU:HD22	1.89	0.55
1:B:1235:LYS:H	1:B:1235:LYS:CD	2.12	0.55
1:D:3076:ILE:O	1:D:3080:GLU:HG2	2.05	0.55
1:E:4042:VAL:HG22	1:E:4054:ARG:HB3	1.87	0.55
1:F:5040:LYS:N	1:F:5041:PRO:CD	2.69	0.55
1:F:5115:ARG:NH1	1:F:5128:PHE:HB3	2.20	0.55
1:F:5179:HIS:O	1:F:5180:PHE:HD2	1.90	0.55
1:C:2163:TYR:CD1	1:C:2163:TYR:N	2.72	0.55
1:B:1049:GLU:HG3	1:F:5049:GLU:OE2	2.07	0.55
1:B:1220:ILE:HD13	1:B:1220:ILE:H	1.71	0.55
1:B:1016:LEU:HD11	1:B:1086:ILE:HD11	1.87	0.55
1:E:4149:ALA:O	1:E:4151:THR:N	2.39	0.55
1:A:233:THR:O	1:A:236:GLN:HB3	2.06	0.55

Continued on next page...

Continued from previous page...

Atom-1	Atom-2	Interatomic distance (Å)	Clash overlap (Å)
1:E:4079:GLU:O	1:E:4083:GLN:HG3	2.07	0.55
1:E:4186:GLU:O	1:E:4190:MET:HG3	2.07	0.55
1:F:5002:SER:OG	1:F:5007:PHE:CE2	2.59	0.55
1:F:5009:LEU:HB3	1:F:5047:HIS:O	2.06	0.55
1:F:5205:MET:O	1:F:5207:ALA:N	2.37	0.55
1:F:5236:GLN:HA	1:F:5239:SER:HG	1.72	0.55
1:F:5242:VAL:O	1:F:5246:VAL:HG23	2.07	0.55
1:B:1126:LEU:HD23	1:D:3126:LEU:HD23	1.87	0.55
1:C:2032:GLU:HG2	1:C:2033:LYS:N	2.22	0.55
1:B:1155:VAL:HG23	1:B:1192:VAL:HG22	1.89	0.55
1:B:1163:TYR:N	1:B:1163:TYR:HD1	2.04	0.55
1:D:3033:LYS:HD2	1:D:3033:LYS:N	2.22	0.55
1:C:2076:ILE:HA	1:C:2079:GLU:HG2	1.89	0.54
1:F:5023:ILE:HG22	1:F:5092:ILE:HD11	1.89	0.54
1:D:3055:ALA:HB3	1:D:3062:VAL:HG23	1.88	0.54
1:E:4162:PHE:C	1:E:4164:PRO:HD3	2.28	0.54
1:A:6:VAL:O	1:A:8:HIS:N	2.39	0.54
1:A:49:GLU:HG3	1:D:3049:GLU:HG3	1.88	0.54
1:A:196:GLU:CG	1:A:197:MET:H	2.20	0.54
1:A:247:GLU:O	1:A:250:ARG:HG2	2.08	0.54
1:C:2099:GLN:HB2	1:C:2102:ILE:CD1	2.38	0.54
1:A:1:MET:HG2	1:A:2:SER:N	2.21	0.54
1:D:3035:ALA:O	1:D:3041:PRO:HB3	2.08	0.54
1:F:5235:LYS:NZ	1:F:5239:SER:OG	2.41	0.54
1:A:16:LEU:HD11	1:A:84:LEU:HB3	1.90	0.54
1:A:56:GLU:HB2	1:A:60:LYS:O	2.08	0.54
1:D:3058:ASP:O	1:D:3060:LYS:HD3	2.08	0.54
1:E:4031:VAL:HB	1:E:4064:VAL:HG12	1.90	0.54
1:A:141:VAL:HG11	1:E:4134:PHE:CE1	2.43	0.54
1:E:4037:LEU:HD12	1:E:4037:LEU:H	1.73	0.54
1:F:5001:MET:CA	1:F:5007:PHE:CZ	2.91	0.54
1:F:5016:LEU:HD11	1:F:5084:LEU:HD13	1.89	0.54
1:A:183:SER:O	1:A:187:TRP:CD1	2.61	0.54
1:C:2229:PRO:CG	1:C:2234:MET:HG2	2.16	0.54
1:B:1032:GLU:HG3	1:B:1033:LYS:N	2.22	0.54
1:E:4212:ARG:HH11	1:E:4252:LEU:CD2	2.20	0.54
1:F:5230:ASN:O	1:F:5232:GLU:N	2.41	0.54
1:A:235:LYS:O	1:A:238:GLU:HB3	2.09	0.53
1:D:3160:ASP:O	1:D:3161:THR:OG1	2.21	0.53
1:A:8:HIS:CG	1:A:9:LEU:HD22	2.42	0.53
1:A:167:GLU:HB3	1:A:184:MET:CE	2.39	0.53

Continued on next page...

Continued from previous page...

Atom-1	Atom-2	Interatomic distance (Å)	Clash overlap (Å)
1:D:3168:ARG:CZ	1:D:3168:ARG:HB3	2.36	0.53
1:E:4168:ARG:O	1:E:4168:ARG:NE	2.41	0.53
1:A:161:THR:O	1:A:163:TYR:N	2.41	0.53
1:B:1155:VAL:CG2	1:B:1192:VAL:HG22	2.38	0.53
1:B:1212:ARG:NH1	1:B:1252:LEU:HG	2.24	0.53
1:D:3089:PHE:O	1:D:3213:ALA:HA	2.09	0.53
1:A:6:VAL:O	1:A:8:HIS:HB2	2.08	0.53
1:A:9:LEU:HA	1:A:47:HIS:ND1	2.24	0.53
1:B:1106:ASP:HB3	1:B:1150:THR:HB	1.91	0.53
1:C:2076:ILE:O	1:C:2079:GLU:HG2	2.08	0.53
1:F:5023:ILE:CG2	1:F:5092:ILE:HD11	2.38	0.53
1:C:2238:GLU:O	1:C:2242:VAL:HG23	2.08	0.53
1:D:3133:ASP:HB2	1:D:3211:LEU:HG	1.90	0.53
1:F:5037:LEU:HD11	1:F:5242:VAL:HG12	1.89	0.53
1:A:112:ALA:CB	1:E:4131:VAL:HG11	2.38	0.53
1:C:2056:GLU:HG2	1:C:2057:LEU:N	2.24	0.53
1:C:2116:LEU:HD23	1:F:5127:GLU:HG2	1.90	0.53
1:C:2225:GLN:O	1:C:2228:ILE:HG22	2.09	0.53
1:E:4176:VAL:HG12	1:E:4177:VAL:N	2.17	0.53
1:A:97:ALA:HA	1:A:194:ASN:HB3	1.91	0.53
1:C:2140:LEU:HD22	1:C:2216:VAL:HB	1.91	0.53
1:A:38:MET:HB2	1:A:55:ALA:HB1	1.90	0.53
1:B:1143:ALA:O	1:B:1146:SER:HB3	2.09	0.53
1:A:67:THR:HG22	1:A:77:ALA:CB	2.38	0.53
1:C:2231:ALA:HA	1:C:2234:MET:HG3	1.90	0.53
1:F:5021:LEU:HG	1:F:5022:ALA:N	2.24	0.53
1:C:2216:VAL:HG11	1:C:2245:VAL:HB	1.92	0.52
1:D:3106:ASP:O	1:D:3219:VAL:HB	2.08	0.52
1:E:4071:GLY:HA2	1:E:4074:THR:HB	1.91	0.52
1:D:3160:ASP:HA	1:D:3197:MET:HG3	1.91	0.52
1:F:5001:MET:HA	1:F:5007:PHE:CZ	2.45	0.52
1:C:2094:THR:HB	1:C:2220:ILE:HG23	1.91	0.52
1:F:5123:PHE:CD1	1:F:5205:MET:CE	2.92	0.52
1:A:38:MET:CB	1:A:55:ALA:HB1	2.40	0.52
1:A:205:MET:C	1:A:205:MET:SD	2.88	0.52
1:A:211:LEU:HD23	1:A:211:LEU:H	1.75	0.52
1:D:3025:PRO:HG3	1:D:3031:VAL:HG22	1.91	0.52
1:E:4028:PRO:HB3	1:E:4051:THR:HG21	1.91	0.52
1:E:4178:ARG:O	1:E:4181:LYS:HG2	2.09	0.52
1:B:1114:VAL:HA	1:D:3129:PRO:HD3	1.91	0.52
1:B:1178:ARG:HH21	1:B:1179:HIS:HB3	1.73	0.52

Continued on next page...

Continued from previous page...

Atom-1	Atom-2	Interatomic distance (Å)	Clash overlap (Å)
1:D:3108:LEU:HB3	1:D:3193:MET:CE	2.38	0.52
1:F:5002:SER:CA	1:F:5007:PHE:CE1	2.92	0.52
1:F:5011:LEU:HD23	1:F:5011:LEU:N	2.25	0.52
1:F:5102:ILE:HG12	1:F:5152:HIS:CE1	2.45	0.52
1:B:1003:LYS:CB	1:B:1007:PHE:HD2	2.23	0.52
1:E:4038:MET:HB3	1:E:4055:ALA:HB1	1.90	0.52
1:A:62:VAL:CG2	1:A:253:LEU:HD21	2.38	0.52
1:C:2176:VAL:HG23	1:C:2177:VAL:N	2.23	0.52
1:D:3092:ILE:HD12	1:D:3093:GLY:H	1.75	0.52
1:F:5057:LEU:HD11	1:F:5250:ARG:NH1	2.25	0.52
1:F:5163:TYR:CD1	1:F:5163:TYR:N	2.77	0.52
1:A:226:GLN:HA	1:D:3001:MET:HB3	1.90	0.52
1:A:248:ALA:O	1:A:252:LEU:HD23	2.10	0.52
1:C:2019:ALA:O	1:C:2020:THR:HB	2.09	0.52
1:C:2043:LYS:NZ	1:C:2052:THR:O	2.40	0.52
1:D:3057:LEU:O	1:D:3060:LYS:HB2	2.10	0.52
1:E:4057:LEU:HD11	1:E:4250:ARG:HB2	1.92	0.52
1:B:1039:ASP:N	1:B:1056:GLU:O	2.43	0.52
1:C:2096:GLY:HA2	1:C:2221:VAL:O	2.10	0.52
1:F:5024:VAL:HG23	1:F:5024:VAL:O	2.10	0.52
1:C:2115:ARG:HH21	1:C:2121:LEU:HD12	1.74	0.52
1:D:3091:ARG:CG	1:D:3215:MET:HG3	2.40	0.52
1:E:4158:SER:HA	1:E:4196:GLU:O	2.09	0.52
1:E:4209:GLN:C	1:E:4211:LEU:H	2.14	0.52
1:B:1038:MET:CE	1:B:1246:VAL:HG12	2.40	0.51
1:D:3243:LYS:O	1:D:3247:GLU:HB2	2.10	0.51
1:A:114:VAL:HG13	1:E:4128:PHE:HA	1.90	0.51
1:B:1074:THR:CG2	1:B:1078:VAL:HG21	2.38	0.51
1:B:1163:TYR:HB3	1:B:1223:ARG:NH2	2.25	0.51
1:C:2007:PHE:O	1:C:2008:HIS:HB2	2.10	0.51
1:D:3139:ALA:CB	1:D:3252:LEU:HD21	2.40	0.51
1:D:3176:VAL:HG22	1:D:3177:VAL:HG22	1.92	0.51
1:E:4206:CYS:O	1:E:4208:SER:N	2.42	0.51
1:F:5091:ARG:HG2	1:F:5215:MET:SD	2.50	0.51
1:A:1:MET:N	1:D:3228:ILE:HG22	2.25	0.51
1:B:1104:VAL:HG12	1:B:1233:THR:HG21	1.93	0.51
1:C:2089:PHE:O	1:C:2213:ALA:HA	2.09	0.51
1:C:2190:MET:HE2	1:F:5123:PHE:O	2.10	0.51
1:E:4078:VAL:CB	1:E:4205:MET:SD	2.99	0.51
1:F:5002:SER:HA	1:F:5007:PHE:CE2	2.42	0.51
1:B:1177:VAL:HG11	1:B:1180:PHE:HB2	1.92	0.51

Continued on next page...

Continued from previous page...

Atom-1	Atom-2	Interatomic distance (Å)	Clash overlap (Å)
1:E:4024:VAL:HG23	1:E:4024:VAL:O	2.10	0.51
1:E:4028:PRO:HA	1:E:4031:VAL:HG13	1.92	0.51
1:F:5022:ALA:HA	1:F:5063:ILE:O	2.11	0.51
1:B:1161:THR:OG1	1:F:5122:HIS:HD2	1.93	0.51
1:C:2011:LEU:HB2	1:C:2084:LEU:HD21	1.93	0.51
1:C:2156:THR:HG23	1:C:2194:ASN:OD1	2.11	0.51
1:E:4128:PHE:CG	1:E:4129:PRO:HD2	2.46	0.51
1:B:1001:MET:HG3	1:B:1009:LEU:CD2	2.41	0.51
1:B:1147:ILE:HD11	1:B:1244:ILE:HD11	1.92	0.51
1:B:1249:ALA:O	1:B:1253:LEU:HG	2.10	0.51
1:A:227:GLU:N	1:D:3001:MET:HB2	2.26	0.51
1:B:1098:ILE:HG12	1:B:1193:MET:O	2.10	0.51
1:C:2054:ARG:HG2	1:C:2055:ALA:N	2.26	0.51
1:F:5039:ASP:C	1:F:5041:PRO:HD3	2.31	0.51
1:A:6:VAL:HG13	1:A:7:PHE:N	2.26	0.50
1:A:206:CYS:O	1:A:208:SER:N	2.44	0.50
1:B:1115:ARG:NH2	1:B:1121:LEU:HD22	2.23	0.50
1:B:1162:PHE:CZ	1:F:5008:HIS:HD2	2.29	0.50
1:C:2001:MET:SD	1:C:2001:MET:C	2.89	0.50
1:F:5113:SER:HA	1:F:5156:THR:O	2.11	0.50
1:F:5142:GLU:O	1:F:5145:LYS:HB2	2.11	0.50
1:B:1009:LEU:HD22	1:B:1047:HIS:HB3	1.93	0.50
1:C:2104:VAL:CG2	1:C:2228:ILE:HG13	2.41	0.50
1:E:4037:LEU:O	1:E:4038:MET:HE2	2.12	0.50
1:E:4164:PRO:HB3	1:E:4171:THR:HB	1.93	0.50
1:A:108:LEU:HD23	1:A:152:HIS:HB2	1.93	0.50
1:C:2001:MET:HB3	1:E:4223:ARG:HD2	1.92	0.50
1:E:4225:GLN:O	1:E:4227:GLU:HG3	2.11	0.50
1:B:1076:ILE:HD13	1:F:5162:PHE:HE1	1.75	0.50
1:F:5025:PRO:O	1:F:5066:SER:HA	2.12	0.50
1:F:5110:THR:HG21	1:F:5156:THR:HB	1.94	0.50
1:A:62:VAL:HG22	1:A:253:LEU:HD21	1.94	0.50
1:A:126:LEU:HD21	1:E:4127:GLU:HG2	1.94	0.50
1:D:3207:ALA:N	1:D:3211:LEU:HD13	2.26	0.50
1:E:4091:ARG:NH2	1:E:4198:GLU:HG3	2.26	0.50
1:B:1022:ALA:CB	1:B:1086:ILE:HG21	2.40	0.50
1:C:2095:THR:HG21	1:C:2194:ASN:ND2	2.26	0.50
1:C:2226:GLN:C	1:C:2228:ILE:H	2.15	0.50
1:E:4226:GLN:O	1:E:4227:GLU:HB3	2.12	0.50
1:F:5087:ARG:CB	1:F:5211:LEU:HD13	2.42	0.50
1:A:107:VAL:HA	1:A:217:ALA:O	2.12	0.50

Continued on next page...

Continued from previous page...

Atom-1	Atom-2	Interatomic distance (Å)	Clash overlap (Å)
1:F:5024:VAL:HG22	1:F:5090:LEU:O	2.12	0.50
1:C:2208:SER:O	1:C:2209:GLN:CB	2.60	0.50
1:D:3226:GLN:HG3	1:D:3227:GLU:N	2.27	0.50
1:E:4008:HIS:CE1	1:E:4076:ILE:HG21	2.47	0.50
1:E:4223:ARG:HD3	1:E:4223:ARG:H	1.77	0.50
1:F:5025:PRO:HB3	1:F:5092:ILE:HD12	1.94	0.50
1:B:1118:GLY:HA3	1:F:5118:GLY:HA3	1.93	0.49
1:D:3136:CYS:SG	1:D:3212:ARG:HA	2.52	0.49
1:B:1074:THR:O	1:B:1078:VAL:HG23	2.12	0.49
1:D:3091:ARG:CB	1:D:3215:MET:HG3	2.39	0.49
1:F:5057:LEU:HB3	1:F:5253:LEU:HD11	1.94	0.49
1:A:21:LEU:HD21	1:A:90:LEU:HD23	1.93	0.49
1:F:5029:ASP:O	1:F:5031:VAL:N	2.46	0.49
1:F:5096:GLY:HA2	1:F:5221:VAL:O	2.12	0.49
1:C:2001:MET:N	1:E:4226:GLN:HB2	2.27	0.49
1:C:2009:LEU:HB3	1:C:2011:LEU:HD23	1.93	0.49
1:C:2149:ALA:O	1:C:2151:THR:N	2.45	0.49
1:E:4102:ILE:CG2	1:E:4108:LEU:HD21	2.41	0.49
1:A:140:LEU:HD12	1:A:248:ALA:CB	2.43	0.49
1:A:233:THR:HG23	1:A:236:GLN:OE1	2.13	0.49
1:C:2001:MET:HG2	1:E:4221:VAL:HG21	1.92	0.49
1:C:2062:VAL:CG1	1:C:2253:LEU:HD11	2.42	0.49
1:C:2062:VAL:HG13	1:C:2253:LEU:HD11	1.94	0.49
1:D:3095:THR:O	1:D:3219:VAL:HA	2.12	0.49
1:D:3230:ASN:HD22	1:D:3233:THR:HG23	1.77	0.49
1:A:233:THR:HG23	1:A:236:GLN:CD	2.33	0.49
1:B:1167:GLU:HG2	1:B:1168:ARG:N	2.27	0.49
1:C:2206:CYS:SG	1:C:2213:ALA:HB2	2.52	0.49
1:C:2207:ALA:HA	1:C:2211:LEU:HD22	1.93	0.49
1:C:2240:HIS:O	1:C:2244:ILE:HG13	2.13	0.49
1:D:3114:VAL:HB	1:D:3157:ALA:HA	1.94	0.49
1:D:3216:VAL:HG11	1:D:3245:VAL:HG22	1.94	0.49
1:E:4028:PRO:HB3	1:E:4051:THR:CG2	2.43	0.49
1:F:5123:PHE:HD1	1:F:5205:MET:CE	2.24	0.49
1:A:38:MET:CE	1:A:246:VAL:HG22	2.42	0.49
1:A:140:LEU:HD12	1:A:248:ALA:HB1	1.95	0.49
1:B:1001:MET:SD	1:B:1002:SER:N	2.86	0.49
1:F:5008:HIS:CE1	1:F:5076:ILE:HG21	2.48	0.49
1:D:3228:ILE:HG12	1:D:3229:PRO:CA	2.12	0.49
1:E:4205:MET:O	1:E:4206:CYS:CB	2.60	0.49
1:F:5163:TYR:HD1	1:F:5163:TYR:N	2.06	0.49

Continued on next page...

Continued from previous page...

Atom-1	Atom-2	Interatomic distance (Å)	Clash overlap (Å)
1:C:2104:VAL:HG21	1:C:2228:ILE:HG13	1.93	0.49
1:D:3038:MET:CB	1:D:3055:ALA:HB1	2.43	0.49
1:D:3041:PRO:HA	1:D:3054:ARG:O	2.13	0.49
1:F:5115:ARG:HH12	1:F:5128:PHE:HB3	1.78	0.49
1:A:11:LEU:HD11	1:A:16:LEU:CD2	2.43	0.49
1:A:38:MET:HE2	1:A:246:VAL:HG22	1.95	0.49
1:A:101:HIS:H	1:A:101:HIS:CD2	2.31	0.49
1:A:140:LEU:CD1	1:A:140:LEU:N	2.76	0.49
1:B:1098:ILE:N	1:B:1193:MET:O	2.39	0.49
1:C:2007:PHE:O	1:C:2008:HIS:CB	2.61	0.49
1:F:5037:LEU:HD11	1:F:5242:VAL:CG1	2.43	0.49
1:A:165:GLY:HA2	1:A:183:SER:OG	2.13	0.48
1:A:211:LEU:O	1:A:212:ARG:HB2	2.13	0.48
1:B:1022:ALA:HA	1:B:1063:ILE:O	2.12	0.48
1:C:2017:GLN:CD	1:C:2018:GLY:N	2.66	0.48
1:E:4050:PHE:HE1	1:E:4067:THR:O	1.95	0.48
1:E:4211:LEU:O	1:E:4212:ARG:HG2	2.12	0.48
1:F:5177:VAL:HG21	1:F:5179:HIS:NE2	2.28	0.48
1:A:190:MET:HE1	1:E:4124:ALA:HA	1.94	0.48
1:B:1206:CYS:O	1:B:1211:LEU:HA	2.13	0.48
1:C:2108:LEU:HD12	1:C:2217:ALA:HB3	1.94	0.48
1:C:2187:TRP:CH2	1:F:5125:PRO:HG2	2.48	0.48
1:E:4093:GLY:O	1:E:4217:ALA:HA	2.13	0.48
1:F:5107:VAL:O	1:F:5108:LEU:HD23	2.13	0.48
1:A:73:SER:HA	1:A:76:ILE:HD12	1.95	0.48
1:D:3088:THR:HB	1:D:3212:ARG:HB3	1.94	0.48
1:C:2001:MET:SD	1:C:2001:MET:O	2.71	0.48
1:C:2125:PRO:O	1:C:2127:GLU:N	2.46	0.48
1:C:2206:CYS:HB3	1:C:2211:LEU:HD12	1.94	0.48
1:C:2207:ALA:CA	1:C:2211:LEU:HD13	2.43	0.48
1:E:4235:LYS:CG	1:E:4236:GLN:N	2.75	0.48
1:C:2011:LEU:HD12	1:C:2016:LEU:HD22	1.95	0.48
1:C:2043:LYS:NZ	1:C:2045:ALA:O	2.44	0.48
1:C:2236:GLN:O	1:C:2240:HIS:CD2	2.67	0.48
1:D:3210:GLY:O	1:D:3211:LEU:O	2.31	0.48
1:E:4019:ALA:C	1:E:4021:LEU:H	2.17	0.48
1:B:1018:GLY:O	1:B:1061:PRO:HG2	2.14	0.48
1:E:4022:ALA:HA	1:E:4063:ILE:O	2.13	0.48
1:E:4034:ILE:HD11	1:E:4092:ILE:HD13	1.96	0.48
1:D:3104:VAL:HA	1:D:3219:VAL:HG12	1.96	0.48
1:E:4235:LYS:HG3	1:E:4236:GLN:N	2.28	0.48

Continued on next page...

Continued from previous page...

Atom-1	Atom-2	Interatomic distance (Å)	Clash overlap (Å)
1:C:2228:ILE:HD12	1:C:2229:PRO:HA	1.96	0.48
1:F:5001:MET:O	1:F:5007:PHE:CG	2.67	0.48
1:F:5133:ASP:O	1:F:5137:THR:OG1	2.23	0.48
1:A:165:GLY:HA2	1:A:180:PHE:O	2.14	0.47
1:A:235:LYS:H	1:A:235:LYS:HD2	1.79	0.47
1:D:3038:MET:SD	1:D:3062:VAL:HG23	2.53	0.47
1:D:3108:LEU:HD22	1:D:3152:HIS:HB2	1.96	0.47
1:E:4016:LEU:HD12	1:E:4063:ILE:HD13	1.96	0.47
1:E:4242:VAL:O	1:E:4246:VAL:HG23	2.14	0.47
1:F:5116:LEU:O	1:F:5159:SER:HA	2.13	0.47
1:B:1047:HIS:O	1:B:1049:GLU:N	2.48	0.47
1:D:3232:GLU:O	1:D:3236:GLN:N	2.44	0.47
1:F:5193:MET:O	1:F:5194:ASN:OD1	2.32	0.47
1:A:206:CYS:O	1:A:211:LEU:HB3	2.15	0.47
1:C:2152:HIS:HB3	1:C:2193:MET:HE1	1.96	0.47
1:F:5013:LYS:CA	1:F:5084:LEU:HD22	2.45	0.47
1:A:106:ASP:OD1	1:A:150:THR:HB	2.13	0.47
1:B:1163:TYR:HB3	1:B:1223:ARG:HH22	1.78	0.47
1:B:1212:ARG:HH12	1:B:1252:LEU:HG	1.79	0.47
1:F:5158:SER:HB2	1:F:5199:SER:OG	2.14	0.47
1:B:1166:GLN:HB3	1:B:1177:VAL:HG21	1.96	0.47
1:C:2091:ARG:HB3	1:C:2215:MET:HG3	1.97	0.47
1:C:2138:THR:O	1:C:2142:GLU:HG2	2.15	0.47
1:D:3108:LEU:HD13	1:D:3193:MET:HB3	1.96	0.47
1:D:3196:GLU:HG3	1:D:3199:SER:OG	2.14	0.47
1:D:3211:LEU:CG	1:D:3212:ARG:H	2.13	0.47
1:E:4010:GLY:O	1:E:4011:LEU:HD22	2.15	0.47
1:E:4039:ASP:O	1:E:4056:GLU:HG2	2.13	0.47
1:E:4210:GLY:O	1:E:4211:LEU:C	2.53	0.47
1:E:4228:ILE:O	1:E:4230:ASN:N	2.48	0.47
1:F:5002:SER:C	1:F:5007:PHE:CG	2.87	0.47
1:A:21:LEU:HD23	1:A:22:ALA:N	2.30	0.47
1:A:141:VAL:HG11	1:E:4134:PHE:HE1	1.78	0.47
1:F:5175:ARG:O	1:F:5176:VAL:HG23	2.14	0.47
1:A:2:SER:C	1:A:4:SER:H	2.17	0.47
1:F:5005:ASP:O	1:F:5006:VAL:HB	2.15	0.47
1:F:5178:ARG:HA	1:F:5181:LYS:HB3	1.97	0.47
1:C:2091:ARG:NH1	1:C:2198:GLU:HB2	2.29	0.47
1:E:4046:SER:OG	1:E:4047:HIS:N	2.47	0.47
1:E:4016:LEU:HD12	1:E:4063:ILE:HG21	1.96	0.47
1:A:20:THR:HA	1:A:86:ILE:HA	1.96	0.47

Continued on next page...

Continued from previous page...

Atom-1	Atom-2	Interatomic distance (Å)	Clash overlap (Å)
1:A:22:ALA:HB2	1:A:86:ILE:HG12	1.96	0.47
1:A:163:TYR:CD2	1:A:223:ARG:NH1	2.83	0.47
1:E:4037:LEU:O	1:E:4038:MET:HG3	2.15	0.47
1:A:9:LEU:HD22	1:A:9:LEU:H	1.80	0.46
1:A:167:GLU:HB3	1:A:184:MET:HE2	1.97	0.46
1:B:1167:GLU:CG	1:B:1168:ARG:N	2.78	0.46
1:E:4178:ARG:HG3	1:E:4179:HIS:N	2.29	0.46
1:A:134:PHE:CE1	1:E:4141:VAL:HG11	2.50	0.46
1:C:2168:ARG:O	1:C:2171:THR:HG23	2.15	0.46
1:D:3032:GLU:HG3	1:D:3033:LYS:HD2	1.97	0.46
1:D:3092:ILE:HB	1:D:3245:VAL:HG21	1.96	0.46
1:E:4024:VAL:O	1:E:4091:ARG:HG3	2.14	0.46
1:E:4094:THR:HB	1:E:4220:ILE:HG21	1.97	0.46
1:F:5055:ALA:C	1:F:5056:GLU:HG2	2.35	0.46
1:B:1009:LEU:HD22	1:B:1047:HIS:CB	2.45	0.46
1:B:1182:GLY:O	1:B:1185:GLU:HG2	2.15	0.46
1:E:4100:PRO:HB3	1:E:4224:THR:HB	1.96	0.46
1:F:5211:LEU:HB3	1:F:5212:ARG:H	1.67	0.46
1:A:167:GLU:OE2	1:A:223:ARG:NH2	2.48	0.46
1:B:1230:ASN:O	1:B:1231:ALA:HB3	2.15	0.46
1:E:4209:GLN:C	1:E:4211:LEU:N	2.68	0.46
1:F:5050:PHE:HA	1:F:5066:SER:OG	2.14	0.46
1:C:2196:GLU:HG2	1:C:2197:MET:H	1.80	0.46
1:F:5056:GLU:HA	1:F:5060:LYS:O	2.15	0.46
1:D:3016:LEU:O	1:D:3017:GLN:HG2	2.16	0.46
1:F:5138:THR:O	1:F:5141:VAL:HG22	2.15	0.46
1:A:2:SER:HA	1:A:5:ASP:OD1	2.16	0.46
1:A:38:MET:HG3	1:A:57:LEU:HD13	1.98	0.46
1:D:3158:SER:HB3	1:D:3200:ALA:HB2	1.98	0.46
1:E:4194:ASN:N	1:E:4194:ASN:HD22	2.14	0.46
1:A:82:ALA:HA	1:A:86:ILE:O	2.16	0.46
1:B:1077:ALA:O	1:B:1078:VAL:CG2	2.64	0.46
1:B:1166:GLN:O	1:B:1167:GLU:HB3	2.16	0.46
1:B:1246:VAL:O	1:B:1250:ARG:HB2	2.15	0.46
1:C:2001:MET:HA	1:E:4221:VAL:HG22	1.97	0.46
1:F:5048:ARG:O	1:F:5050:PHE:N	2.44	0.46
1:F:5206:CYS:HA	1:F:5210:GLY:HA3	1.98	0.46
1:A:163:TYR:N	1:A:163:TYR:CD1	2.84	0.46
1:B:1015:ASP:O	1:B:1044:LEU:HD21	2.16	0.46
1:B:1067:THR:O	1:B:1073:SER:HB2	2.15	0.46
1:B:1099:GLN:HB2	1:B:1102:ILE:HG13	1.97	0.46

Continued on next page...

Continued from previous page...

Atom-1	Atom-2	Interatomic distance (Å)	Clash overlap (Å)
1:B:1226:GLN:HE21	1:B:1226:GLN:CA	2.28	0.46
1:B:1024:VAL:HG23	1:B:1024:VAL:O	2.16	0.45
1:B:1104:VAL:HG13	1:B:1219:VAL:O	2.15	0.45
1:C:2163:TYR:HE1	1:C:2197:MET:HG3	1.81	0.45
1:C:2209:GLN:O	1:C:2211:LEU:N	2.48	0.45
1:B:1079:GLU:O	1:B:1083:GLN:HG3	2.16	0.45
1:C:2015:ASP:C	1:C:2017:GLN:H	2.20	0.45
1:C:2165:GLY:HA2	1:C:2180:PHE:O	2.16	0.45
1:D:3119:ALA:O	1:D:3122:HIS:HB2	2.17	0.45
1:F:5094:THR:HB	1:F:5220:ILE:HD13	1.97	0.45
1:B:1102:ILE:O	1:B:1222:ASN:ND2	2.49	0.45
1:B:1161:THR:OG1	1:F:5122:HIS:CD2	2.68	0.45
1:D:3009:LEU:HD12	1:D:3047:HIS:CB	2.41	0.45
1:D:3099:GLN:HE22	1:D:3188:GLN:HA	1.81	0.45
1:F:5099:GLN:OE1	1:F:5099:GLN:HA	2.15	0.45
1:A:167:GLU:CD	1:A:223:ARG:HD3	2.37	0.45
1:A:208:SER:HA	1:E:4190:MET:O	2.16	0.45
1:C:2065:CYS:SG	1:C:2066:SER:N	2.90	0.45
1:C:2077:ALA:O	1:C:2081:LEU:HB2	2.17	0.45
1:F:5240:HIS:HD2	1:F:5243:LYS:NZ	2.14	0.45
1:A:115:ARG:NH1	1:A:128:PHE:O	2.50	0.45
1:C:2161:THR:O	1:C:2163:TYR:N	2.50	0.45
1:C:2072:PRO:O	1:C:2076:ILE:HG13	2.17	0.45
1:C:2211:LEU:CG	1:C:2212:ARG:N	2.68	0.45
1:E:4104:VAL:CG1	1:E:4233:THR:HG21	2.47	0.45
1:F:5171:THR:HG23	1:F:5176:VAL:HG21	1.99	0.45
1:B:1095:THR:HG21	1:B:1194:ASN:HD22	1.81	0.45
1:C:2036:ALA:C	1:C:2038:MET:H	2.20	0.45
1:C:2122:HIS:HA	1:E:4177:VAL:HG23	1.98	0.45
1:E:4163:TYR:O	1:E:4169:TYR:HB3	2.16	0.45
1:F:5187:TRP:HA	1:F:5187:TRP:CE3	2.52	0.45
1:F:5236:GLN:HA	1:F:5239:SER:CB	2.47	0.45
1:A:6:VAL:O	1:A:7:PHE:C	2.55	0.45
1:A:180:PHE:CE1	1:D:3122:HIS:HA	2.52	0.45
1:F:5016:LEU:CD1	1:F:5084:LEU:HB3	2.47	0.45
1:B:1150:THR:HG22	1:B:1150:THR:O	2.17	0.45
1:E:4113:SER:OG	1:E:4203:LEU:HD23	2.16	0.45
1:F:5031:VAL:HG13	1:F:5064:VAL:CG1	2.47	0.45
1:F:5089:PHE:O	1:F:5213:ALA:HA	2.17	0.45
1:F:5123:PHE:CE1	1:F:5205:MET:HG3	2.51	0.45
1:C:2022:ALA:CB	1:C:2086:ILE:HG21	2.47	0.45

Continued on next page...

Continued from previous page...

Atom-1	Atom-2	Interatomic distance (Å)	Clash overlap (Å)
1:D:3183:SER:HA	1:D:3187:TRP:CD1	2.46	0.45
1:E:4195:TYR:O	1:E:4196:GLU:HG2	2.17	0.45
1:A:206:CYS:C	1:A:211:LEU:HA	2.38	0.44
1:C:2017:GLN:CD	1:C:2018:GLY:H	2.19	0.44
1:C:2095:THR:HG21	1:C:2194:ASN:HD22	1.82	0.44
1:C:2133:ASP:CB	1:C:2212:ARG:HA	2.47	0.44
1:D:3178:ARG:HG3	1:D:3179:HIS:CE1	2.51	0.44
1:D:3237:THR:HA	1:D:3240:HIS:HB2	1.99	0.44
1:E:4091:ARG:HB3	1:E:4215:MET:HG3	1.98	0.44
1:E:4212:ARG:HD2	1:E:4212:ARG:HA	1.72	0.44
1:A:44:LEU:HD11	1:A:54:ARG:HB2	2.00	0.44
1:A:92:ILE:HG13	1:A:216:VAL:HB	1.99	0.44
1:C:2240:HIS:CD2	1:C:2240:HIS:H	2.35	0.44
1:D:3154:GLY:HA3	1:D:3193:MET:SD	2.57	0.44
1:E:4010:GLY:O	1:E:4045:ALA:HB3	2.17	0.44
1:A:141:VAL:O	1:A:145:LYS:HG2	2.17	0.44
1:C:2205:MET:SD	1:C:2206:CYS:N	2.91	0.44
1:E:4051:THR:O	1:E:4065:CYS:SG	2.74	0.44
1:A:170:ASP:HB2	1:A:171:THR:H	1.58	0.44
1:E:4127:GLU:H	1:E:4127:GLU:HG3	1.59	0.44
1:B:1038:MET:HB3	1:B:1039:ASP:H	1.45	0.44
1:B:1145:LYS:HA	1:B:1145:LYS:HD3	1.69	0.44
1:B:1225:GLN:HA	1:B:1225:GLN:OE1	2.17	0.44
1:C:2157:ALA:O	1:C:2195:TYR:HA	2.17	0.44
1:A:126:LEU:O	1:A:126:LEU:HG	2.16	0.44
1:B:1054:ARG:O	1:B:1054:ARG:HG2	2.17	0.44
1:C:2001:MET:HB3	1:E:4223:ARG:HB3	1.99	0.44
1:D:3084:LEU:HD23	1:D:3084:LEU:HA	1.74	0.44
1:E:4211:LEU:O	1:E:4212:ARG:CG	2.66	0.44
1:F:5031:VAL:HG13	1:F:5064:VAL:HG12	1.99	0.44
1:F:5140:LEU:HD11	1:F:5216:VAL:HG12	1.99	0.44
1:F:5243:LYS:HE2	1:F:5243:LYS:HB2	1.75	0.44
1:B:1040:LYS:N	1:B:1041:PRO:CD	2.80	0.44
1:B:1235:LYS:HD3	1:B:1235:LYS:N	2.25	0.44
1:C:2226:GLN:O	1:C:2228:ILE:N	2.50	0.44
1:E:4106:ASP:HB3	1:E:4152:HIS:CD2	2.53	0.44
1:E:4226:GLN:O	1:E:4227:GLU:CB	2.64	0.44
1:A:123:PHE:CD2	1:A:205:MET:HG2	2.52	0.44
1:B:1220:ILE:HG12	1:B:1221:VAL:HG22	2.00	0.44
1:E:4205:MET:O	1:E:4206:CYS:HB2	2.17	0.44
1:F:5184:MET:HA	1:F:5195:TYR:OH	2.18	0.44

Continued on next page...

Continued from previous page...

Atom-1	Atom-2	Interatomic distance (Å)	Clash overlap (Å)
1:F:5199:SER:O	1:F:5203:LEU:HG	2.18	0.44
1:A:72:PRO:HD3	1:D:3072:PRO:HG2	2.00	0.44
1:C:2092:ILE:HA	1:C:2216:VAL:O	2.18	0.44
1:D:3233:THR:O	1:D:3237:THR:N	2.49	0.44
1:F:5093:GLY:O	1:F:5217:ALA:HA	2.18	0.44
1:F:5096:GLY:O	1:F:5194:ASN:HB2	2.17	0.44
1:F:5123:PHE:CD1	1:F:5205:MET:HE3	2.51	0.44
1:A:226:GLN:C	1:D:3001:MET:HB2	2.39	0.43
1:B:1001:MET:SD	1:B:1009:LEU:HD23	2.58	0.43
1:C:2122:HIS:ND1	1:E:4161:THR:OG1	2.51	0.43
1:B:1178:ARG:HD3	1:F:5124:ALA:C	2.38	0.43
1:D:3092:ILE:HA	1:D:3216:VAL:O	2.17	0.43
1:D:3228:ILE:HD11	1:D:3234:MET:CE	2.48	0.43
1:E:4096:GLY:O	1:E:4194:ASN:HB2	2.18	0.43
1:C:2009:LEU:CD2	1:C:2050:PHE:HB3	2.48	0.43
1:C:2012:THR:O	1:C:2013:LYS:CB	2.67	0.43
1:C:2173:SER:OG	1:C:2176:VAL:CA	2.62	0.43
1:E:4091:ARG:CZ	1:E:4198:GLU:HG3	2.49	0.43
1:F:5140:LEU:CD1	1:F:5216:VAL:HB	2.46	0.43
1:A:8:HIS:CD2	1:A:9:LEU:HD22	2.54	0.43
1:A:122:HIS:O	1:D:3176:VAL:HG23	2.18	0.43
1:B:1216:VAL:HG22	1:B:1217:ALA:H	1.82	0.43
1:B:1239:SER:O	1:B:1243:LYS:HG3	2.18	0.43
1:C:2016:LEU:HD23	1:C:2016:LEU:N	2.26	0.43
1:C:2177:VAL:CB	1:C:2181:LYS:HD3	2.47	0.43
1:C:2206:CYS:C	1:C:2211:LEU:HB2	2.39	0.43
1:E:4017:GLN:O	1:E:4061:PRO:HG3	2.18	0.43
1:E:4095:THR:HG22	1:E:4217:ALA:HB1	1.99	0.43
1:C:2167:GLU:O	1:C:2168:ARG:HB2	2.19	0.43
1:C:2209:GLN:O	1:C:2209:GLN:HG3	2.19	0.43
1:D:3092:ILE:HD12	1:D:3093:GLY:N	2.33	0.43
1:A:146:SER:O	1:A:147:ILE:HG12	2.19	0.43
1:A:163:TYR:HA	1:A:164:PRO:HD3	1.86	0.43
1:D:3071:GLY:N	1:D:3072:PRO:CD	2.81	0.43
1:D:3099:GLN:HG2	1:D:3192:VAL:O	2.18	0.43
1:D:3206:CYS:HB3	1:D:3211:LEU:HD12	2.00	0.43
1:F:5178:ARG:HA	1:F:5181:LYS:CB	2.49	0.43
1:A:102:ILE:O	1:A:106:ASP:OD2	2.37	0.43
1:A:196:GLU:CG	1:A:197:MET:N	2.82	0.43
1:C:2015:ASP:O	1:C:2017:GLN:N	2.52	0.43
1:E:4025:PRO:HB3	1:E:4030:ARG:CD	2.49	0.43

Continued on next page...

Continued from previous page...

Atom-1	Atom-2	Interatomic distance (Å)	Clash overlap (Å)
1:F:5015:ASP:HB3	1:F:5044:LEU:HD13	2.01	0.43
1:F:5228:ILE:CG2	1:F:5229:PRO:HA	2.49	0.43
1:C:2076:ILE:HA	1:C:2079:GLU:OE2	2.19	0.43
1:A:147:ILE:O	1:A:147:ILE:CG2	2.65	0.43
1:B:1042:VAL:HG22	1:B:1043:LYS:O	2.18	0.43
1:E:4161:THR:CG2	1:E:4164:PRO:HG3	2.49	0.43
1:F:5013:LYS:HD2	1:F:5084:LEU:HD23	2.00	0.43
1:A:125:PRO:HB2	1:A:127:GLU:CD	2.39	0.43
1:A:169:TYR:O	1:A:170:ASP:CB	2.67	0.43
1:C:2009:LEU:HD23	1:C:2050:PHE:CD1	2.53	0.43
1:E:4063:ILE:HD11	1:E:4081:LEU:HD22	2.00	0.43
1:F:5147:ILE:N	1:F:5147:ILE:HD13	2.34	0.43
1:A:38:MET:CG	1:A:57:LEU:HD13	2.49	0.42
1:B:1226:GLN:HA	1:B:1226:GLN:NE2	2.31	0.42
1:F:5021:LEU:HD12	1:F:5088:THR:HB	1.99	0.42
1:B:1029:ASP:O	1:B:1032:GLU:HG2	2.19	0.42
1:D:3009:LEU:HD12	1:D:3047:HIS:CG	2.54	0.42
1:E:4107:VAL:HG11	1:E:4244:ILE:HD13	2.01	0.42
1:F:5203:LEU:N	1:F:5203:LEU:HD23	2.33	0.42
1:A:57:LEU:CD2	1:A:250:ARG:HB3	2.49	0.42
1:A:116:LEU:HB2	1:A:159:SER:HA	2.01	0.42
1:B:1001:MET:O	1:B:1002:SER:HB2	2.18	0.42
1:C:2176:VAL:HG23	1:C:2177:VAL:O	2.20	0.42
1:D:3167:GLU:HG3	1:D:3169:TYR:CB	2.50	0.42
1:E:4114:VAL:HG12	1:E:4116:LEU:HG	2.01	0.42
1:A:112:ALA:HB2	1:E:4131:VAL:HG11	2.00	0.42
1:B:1209:GLN:OE1	1:F:5174:GLY:HA3	2.19	0.42
1:C:2060:LYS:HD2	1:C:2253:LEU:HB3	2.02	0.42
1:D:3211:LEU:CG	1:D:3212:ARG:N	2.78	0.42
1:B:1050:PHE:CE2	1:B:1077:ALA:HB2	2.54	0.42
1:C:2178:ARG:HB3	1:C:2179:HIS:H	1.53	0.42
1:E:4232:GLU:O	1:E:4232:GLU:HG3	2.19	0.42
1:B:1008:HIS:CD2	1:B:1076:ILE:CG2	3.01	0.42
1:C:2040:LYS:N	1:C:2041:PRO:CD	2.83	0.42
1:C:2196:GLU:HG2	1:C:2197:MET:N	2.35	0.42
1:C:2228:ILE:HA	1:C:2229:PRO:HA	1.62	0.42
1:D:3114:VAL:HG12	1:D:3116:LEU:HG	2.01	0.42
1:D:3161:THR:CG2	1:D:3162:PHE:H	2.21	0.42
1:F:5079:GLU:O	1:F:5083:GLN:HG3	2.20	0.42
1:F:5201:THR:HG23	1:F:5205:MET:CE	2.42	0.42
1:B:1166:GLN:HG3	1:B:1167:GLU:N	2.34	0.42

Continued on next page...

Continued from previous page...

Atom-1	Atom-2	Interatomic distance (Å)	Clash overlap (Å)
1:B:1216:VAL:HG22	1:B:1217:ALA:N	2.35	0.42
1:C:2113:SER:HA	1:C:2156:THR:O	2.20	0.42
1:C:2134:PHE:HZ	1:F:5138:THR:HA	1.84	0.42
1:D:3060:LYS:HA	1:D:3061:PRO:HD2	1.85	0.42
1:F:5003:LYS:N	1:F:5007:PHE:CD1	2.87	0.42
1:A:211:LEU:O	1:A:212:ARG:O	2.38	0.42
1:B:1209:GLN:C	1:B:1211:LEU:N	2.73	0.42
1:D:3011:LEU:HD12	1:D:3011:LEU:N	2.35	0.42
1:A:9:LEU:HD23	1:A:76:ILE:HG21	2.01	0.42
1:C:2180:PHE:CE1	1:E:4122:HIS:HA	2.54	0.42
1:D:3013:LYS:O	1:D:3016:LEU:HB2	2.20	0.42
1:D:3167:GLU:H	1:D:3167:GLU:HG2	1.74	0.42
1:E:4104:VAL:HG13	1:E:4219:VAL:O	2.20	0.42
1:F:5026:GLY:O	1:F:5066:SER:HB2	2.19	0.42
1:A:125:PRO:HB2	1:A:127:GLU:OE1	2.20	0.42
1:C:2167:GLU:HA	1:C:2184:MET:HE2	2.01	0.42
1:C:2179:HIS:CD2	1:C:2179:HIS:N	2.81	0.42
1:C:2240:HIS:HA	1:C:2243:LYS:NZ	2.35	0.42
1:E:4067:THR:HG22	1:E:4077:ALA:CB	2.49	0.42
1:E:4116:LEU:HB2	1:E:4158:SER:O	2.20	0.42
1:A:7:PHE:N	1:A:7:PHE:CD2	2.85	0.41
1:A:9:LEU:HA	1:A:47:HIS:CE1	2.55	0.41
1:A:115:ARG:C	1:A:116:LEU:HD23	2.39	0.41
1:D:3099:GLN:NE2	1:D:3188:GLN:HA	2.35	0.41
1:E:4219:VAL:HG13	1:E:4221:VAL:O	2.20	0.41
1:F:5011:LEU:HD11	1:F:5016:LEU:CD2	2.48	0.41
1:A:99:GLN:NE2	1:A:192:VAL:O	2.52	0.41
1:C:2105:GLY:HA2	1:C:2237:THR:HG1	1.82	0.41
1:F:5158:SER:HB3	1:F:5200:ALA:HB2	2.00	0.41
1:A:230:ASN:O	1:A:231:ALA:HB3	2.20	0.41
1:B:1009:LEU:HD22	1:B:1047:HIS:CG	2.55	0.41
1:B:1106:ASP:HB2	1:B:1150:THR:O	2.21	0.41
1:C:2133:ASP:HB3	1:C:2136:CYS:HB2	2.01	0.41
1:D:3037:LEU:CD2	1:D:3246:VAL:HG21	2.49	0.41
1:F:5027:ASP:HA	1:F:5028:PRO:HD3	1.91	0.41
1:F:5107:VAL:C	1:F:5108:LEU:HD23	2.40	0.41
1:F:5117:ASP:OD2	1:F:5120:SER:OG	2.36	0.41
1:F:5204:THR:CA	1:F:5205:MET:SD	3.09	0.41
1:A:25:PRO:O	1:A:66:SER:HA	2.21	0.41
1:B:1001:MET:CG	1:B:1009:LEU:HD23	2.48	0.41
1:D:3167:GLU:HG3	1:D:3169:TYR:HB2	2.01	0.41

Continued on next page...

Continued from previous page...

Atom-1	Atom-2	Interatomic distance (Å)	Clash overlap (Å)
1:E:4099:GLN:HB2	1:E:4102:ILE:HD12	2.01	0.41
1:A:206:CYS:HB3	1:A:211:LEU:HA	2.02	0.41
1:C:2115:ARG:NH2	1:C:2124:ALA:O	2.52	0.41
1:E:4157:ALA:O	1:E:4195:TYR:CD1	2.73	0.41
1:F:5034:ILE:CD1	1:F:5092:ILE:CD1	2.98	0.41
1:F:5038:MET:HG2	1:F:5057:LEU:HD13	2.02	0.41
1:F:5183:SER:O	1:F:5186:GLU:HB2	2.20	0.41
1:B:1086:ILE:HD12	1:B:1086:ILE:N	2.35	0.41
1:B:1239:SER:HA	1:B:1242:VAL:HG22	2.02	0.41
1:E:4039:ASP:O	1:E:4056:GLU:N	2.48	0.41
1:F:5013:LYS:HD2	1:F:5084:LEU:CD2	2.51	0.41
1:F:5146:SER:C	1:F:5147:ILE:HD13	2.41	0.41
1:A:155:VAL:HG12	1:A:192:VAL:HG22	2.02	0.41
1:A:247:GLU:HA	1:A:250:ARG:HG2	2.03	0.41
1:B:1021:LEU:O	1:B:1063:ILE:HG23	2.21	0.41
1:B:1205:MET:HG2	1:B:1209:GLN:NE2	2.35	0.41
1:D:3177:VAL:HB	1:D:3178:ARG:H	1.66	0.41
1:F:5073:SER:O	1:F:5074:THR:C	2.59	0.41
1:A:1:MET:HE2	1:D:3228:ILE:HG23	2.03	0.41
1:A:165:GLY:O	1:A:166:GLN:CB	2.68	0.41
1:B:1142:GLU:O	1:B:1146:SER:HB2	2.21	0.41
1:B:1209:GLN:OE1	1:F:5172:TYR:HE2	2.02	0.41
1:C:2050:PHE:N	1:C:2050:PHE:CD2	2.88	0.41
1:F:5099:GLN:HB2	1:F:5102:ILE:HD12	2.02	0.41
1:A:224:THR:O	1:A:225:GLN:CD	2.59	0.41
1:B:1239:SER:HA	1:B:1242:VAL:CG2	2.51	0.41
1:C:2133:ASP:HB2	1:C:2212:ARG:HA	2.02	0.41
1:C:2167:GLU:HG2	1:C:2223:ARG:CG	2.48	0.41
1:C:2234:MET:HE3	1:C:2234:MET:HB3	1.88	0.41
1:D:3091:ARG:HG3	1:D:3092:ILE:N	2.36	0.41
1:E:4184:MET:HE3	1:E:4185:GLU:HG2	2.03	0.41
1:E:4243:LYS:HD2	1:E:4243:LYS:HA	1.83	0.41
1:F:5034:ILE:HD11	1:F:5092:ILE:CD1	2.51	0.41
1:F:5206:CYS:HA	1:F:5210:GLY:CA	2.51	0.41
1:A:146:SER:O	1:A:146:SER:OG	2.36	0.41
1:C:2207:ALA:HA	1:C:2211:LEU:HD13	2.02	0.41
1:E:4011:LEU:HD12	1:E:4016:LEU:HD21	2.03	0.41
1:A:1:MET:H1	1:D:3228:ILE:HG22	1.85	0.40
1:B:1172:TYR:HE1	1:F:5209:GLN:O	2.04	0.40
1:C:2011:LEU:HD21	1:C:2052:THR:CG2	2.45	0.40
1:D:3225:GLN:OE1	1:D:3226:GLN:N	2.53	0.40

Continued on next page...

Continued from previous page...

Atom-1	Atom-2	Interatomic distance (Å)	Clash overlap (Å)
1:F:5013:LYS:HD2	1:F:5084:LEU:HA	2.02	0.40
1:A:247:GLU:O	1:A:251:ARG:HG3	2.22	0.40
1:B:1019:ALA:O	1:B:1020:THR:HB	2.21	0.40
1:C:2048:ARG:O	1:C:2049:GLU:HG2	2.22	0.40
1:C:2122:HIS:CG	1:E:4161:THR:OG1	2.74	0.40
1:C:2143:ALA:HB1	1:C:2247:GLU:HG3	2.03	0.40
1:D:3070:GLY:HA2	1:D:3197:MET:HG2	2.02	0.40
1:E:4074:THR:OG1	1:E:4198:GLU:HB3	2.21	0.40
1:B:1063:ILE:O	1:B:1063:ILE:HG13	2.20	0.40
1:C:2024:VAL:O	1:C:2024:VAL:HG23	2.22	0.40
1:F:5109:VAL:HB	1:F:5153:VAL:HG13	2.03	0.40
1:B:1008:HIS:HD2	1:B:1076:ILE:CG2	2.35	0.40
1:C:2011:LEU:CD2	1:C:2011:LEU:H	2.35	0.40
1:C:2220:ILE:O	1:C:2229:PRO:HD3	2.21	0.40
1:E:4042:VAL:O	1:E:4042:VAL:HG23	2.21	0.40
1:F:5228:ILE:HG23	1:F:5229:PRO:HA	2.04	0.40
1:A:206:CYS:C	1:A:211:LEU:HB3	2.41	0.40
1:A:209:GLN:HA	1:A:211:LEU:HD23	2.04	0.40
1:B:1105:GLY:N	1:B:1219:VAL:O	2.55	0.40
1:B:1106:ASP:OD2	1:B:1106:ASP:N	2.53	0.40
1:E:4020:THR:O	1:E:4088:THR:N	2.49	0.40

There are no symmetry-related clashes.

5.3 Torsion angles (i)

5.3.1 Protein backbone (i)

In the following table, the Percentiles column shows the percent Ramachandran outliers of the chain as a percentile score with respect to all X-ray entries followed by that with respect to entries of similar resolution.

The Analysed column shows the number of residues for which the backbone conformation was analysed, and the total number of residues.

Mol	Chain	Analysed	Favoured	Allowed	Outliers	Percentiles
1	A	251/253 (99%)	189 (75%)	37 (15%)	25 (10%)	0 0
1	B	251/253 (99%)	180 (72%)	47 (19%)	24 (10%)	0 0
1	C	251/253 (99%)	193 (77%)	35 (14%)	23 (9%)	1 0
1	D	251/253 (99%)	194 (77%)	40 (16%)	17 (7%)	1 1

Continued on next page...

Continued from previous page...

Mol	Chain	Analysed	Favoured	Allowed	Outliers	Percentiles
1	E	251/253 (99%)	187 (74%)	41 (16%)	23 (9%)	1 0
1	F	251/253 (99%)	193 (77%)	39 (16%)	19 (8%)	1 1
All	All	1506/1518 (99%)	1136 (75%)	239 (16%)	131 (9%)	1 0

All (131) Ramachandran outliers are listed below:

Mol	Chain	Res	Type
1	A	6	VAL
1	A	7	PHE
1	A	13	LYS
1	A	30	ARG
1	A	163	TYR
1	A	164	PRO
1	A	166	GLN
1	A	178	ARG
1	A	211	LEU
1	A	228	ILE
1	B	1002	SER
1	B	1164	PRO
1	B	1167	GLU
1	B	1176	VAL
1	B	1178	ARG
1	B	1212	ARG
1	B	1225	GLN
1	B	1227	GLU
1	B	1229	PRO
1	B	1232	GLU
1	C	2008	HIS
1	C	2126	LEU
1	C	2162	PHE
1	C	2166	GLN
1	C	2168	ARG
1	C	2209	GLN
1	C	2211	LEU
1	D	3008	HIS
1	D	3025	PRO
1	D	3115	ARG
1	D	3164	PRO
1	D	3177	VAL
1	D	3181	LYS
1	D	3184	MET

Continued on next page...

Continued from previous page...

Mol	Chain	Res	Type
1	D	3211	LEU
1	D	3231	ALA
1	E	4150	THR
1	E	4162	PHE
1	E	4172	TYR
1	E	4206	CYS
1	E	4211	LEU
1	F	5227	GLU
1	F	5231	ALA
1	F	5234	MET
1	A	115	ARG
1	A	147	ILE
1	A	170	ASP
1	A	173	SER
1	A	176	VAL
1	A	226	GLN
1	A	231	ALA
1	B	1009	LEU
1	B	1019	ALA
1	B	1020	THR
1	B	1037	LEU
1	B	1048	ARG
1	B	1078	VAL
1	B	1210	GLY
1	B	1211	LEU
1	C	2016	LEU
1	C	2150	THR
1	C	2164	PRO
1	C	2176	VAL
1	C	2178	ARG
1	C	2223	ARG
1	D	3003	LYS
1	D	3160	ASP
1	D	3161	THR
1	D	3170	ASP
1	E	4007	PHE
1	E	4045	ALA
1	E	4168	ARG
1	E	4171	THR
1	E	4176	VAL
1	E	4179	HIS
1	E	4208	SER

Continued on next page...

Continued from previous page...

Mol	Chain	Res	Type
1	E	4209	GLN
1	E	4227	GLU
1	E	4234	MET
1	F	5003	LYS
1	F	5030	ARG
1	F	5047	HIS
1	F	5049	GLU
1	F	5175	ARG
1	A	5	ASP
1	A	169	TYR
1	A	179	HIS
1	A	207	ALA
1	B	1011	LEU
1	B	1233	THR
1	B	1234	MET
1	C	2015	ASP
1	C	2017	GLN
1	C	2227	GLU
1	D	3026	GLY
1	D	3225	GLN
1	E	4019	ALA
1	E	4164	PRO
1	E	4173	SER
1	E	4178	ARG
1	E	4212	ARG
1	F	5017	GLN
1	F	5048	ARG
1	F	5163	TYR
1	F	5209	GLN
1	A	118	GLY
1	A	206	CYS
1	C	2030	ARG
1	C	2049	GLU
1	C	2210	GLY
1	E	4163	TYR
1	F	5009	LEU
1	F	5020	THR
1	F	5171	THR
1	F	5211	LEU
1	A	186	GLU
1	B	1231	ALA
1	C	2009	LEU

Continued on next page...

Continued from previous page...

Mol	Chain	Res	Type
1	D	3009	LEU
1	E	4038	MET
1	F	5115	ARG
1	B	1121	LEU
1	C	2219	VAL
1	A	102	ILE
1	C	2147	ILE
1	C	2163	TYR
1	F	5040	LYS
1	E	4174	GLY
1	B	1006	VAL
1	F	5006	VAL
1	D	3118	GLY

5.3.2 Protein sidechains (i)

In the following table, the Percentiles column shows the percent sidechain outliers of the chain as a percentile score with respect to all X-ray entries followed by that with respect to entries of similar resolution.

The Analysed column shows the number of residues for which the sidechain conformation was analysed, and the total number of residues.

Mol	Chain	Analysed	Rotameric	Outliers	Percentiles
1	A	200/204 (98%)	170 (85%)	30 (15%)	3 5
1	B	200/204 (98%)	166 (83%)	34 (17%)	2 3
1	C	200/204 (98%)	168 (84%)	32 (16%)	2 4
1	D	200/204 (98%)	158 (79%)	42 (21%)	1 2
1	E	200/204 (98%)	165 (82%)	35 (18%)	2 3
1	F	200/204 (98%)	168 (84%)	32 (16%)	2 4
All	All	1200/1224 (98%)	995 (83%)	205 (17%)	2 3

All (205) residues with a non-rotameric sidechain are listed below:

Mol	Chain	Res	Type
1	A	1	MET
1	A	7	PHE
1	A	8	HIS
1	A	9	LEU
1	A	11	LEU

Continued on next page...

Continued from previous page...

Mol	Chain	Res	Type
1	A	38	MET
1	A	57	LEU
1	A	64	VAL
1	A	80	GLU
1	A	83	GLN
1	A	84	LEU
1	A	92	ILE
1	A	94	THR
1	A	140	LEU
1	A	146	SER
1	A	153	VAL
1	A	156	THR
1	A	160	ASP
1	A	163	TYR
1	A	166	GLN
1	A	169	TYR
1	A	178	ARG
1	A	199	SER
1	A	205	MET
1	A	211	LEU
1	A	221	VAL
1	A	226	GLN
1	A	235	LYS
1	A	247	GLU
1	A	253	LEU
1	B	1001	MET
1	B	1011	LEU
1	B	1012	THR
1	B	1016	LEU
1	B	1021	LEU
1	B	1033	LYS
1	B	1038	MET
1	B	1058	ASP
1	B	1062	VAL
1	B	1063	ILE
1	B	1088	THR
1	B	1090	LEU
1	B	1091	ARG
1	B	1092	ILE
1	B	1106	ASP
1	B	1127	GLU
1	B	1151	THR

Continued on next page...

Continued from previous page...

Mol	Chain	Res	Type
1	B	1160	ASP
1	B	1161	THR
1	B	1163	TYR
1	B	1166	GLN
1	B	1168	ARG
1	B	1169	TYR
1	B	1171	THR
1	B	1173	SER
1	B	1178	ARG
1	B	1186	GLU
1	B	1187	TRP
1	B	1211	LEU
1	B	1220	ILE
1	B	1221	VAL
1	B	1224	THR
1	B	1226	GLN
1	B	1235	LYS
1	C	2002	SER
1	C	2006	VAL
1	C	2013	LYS
1	C	2016	LEU
1	C	2032	GLU
1	C	2042	VAL
1	C	2043	LYS
1	C	2052	THR
1	C	2073	SER
1	C	2081	LEU
1	C	2084	LEU
1	C	2091	ARG
1	C	2092	ILE
1	C	2095	THR
1	C	2145	LYS
1	C	2160	ASP
1	C	2162	PHE
1	C	2163	TYR
1	C	2169	TYR
1	C	2173	SER
1	C	2178	ARG
1	C	2179	HIS
1	C	2186	GLU
1	C	2193	MET
1	C	2196	GLU

Continued on next page...

Continued from previous page...

Mol	Chain	Res	Type
1	C	2201	THR
1	C	2205	MET
1	C	2209	GLN
1	C	2215	MET
1	C	2223	ARG
1	C	2237	THR
1	C	2238	GLU
1	D	3007	PHE
1	D	3011	LEU
1	D	3012	THR
1	D	3015	ASP
1	D	3016	LEU
1	D	3033	LYS
1	D	3040	LYS
1	D	3049	GLU
1	D	3052	THR
1	D	3060	LYS
1	D	3088	THR
1	D	3090	LEU
1	D	3091	ARG
1	D	3094	THR
1	D	3095	THR
1	D	3098	ILE
1	D	3106	ASP
1	D	3111	THR
1	D	3113	SER
1	D	3147	ILE
1	D	3151	THR
1	D	3166	GLN
1	D	3169	TYR
1	D	3170	ASP
1	D	3178	ARG
1	D	3180	PHE
1	D	3185	GLU
1	D	3194	ASN
1	D	3196	GLU
1	D	3202	LEU
1	D	3205	MET
1	D	3209	GLN
1	D	3221	VAL
1	D	3224	THR
1	D	3229	PRO

Continued on next page...

Continued from previous page...

Mol	Chain	Res	Type
1	D	3234	MET
1	D	3235	LYS
1	D	3236	GLN
1	D	3240	HIS
1	D	3243	LYS
1	D	3247	GLU
1	D	3253	LEU
1	E	4001	MET
1	E	4009	LEU
1	E	4011	LEU
1	E	4029	ASP
1	E	4047	HIS
1	E	4052	THR
1	E	4063	ILE
1	E	4067	THR
1	E	4084	LEU
1	E	4092	ILE
1	E	4103	ASN
1	E	4109	VAL
1	E	4120	SER
1	E	4126	LEU
1	E	4141	VAL
1	E	4145	LYS
1	E	4147	ILE
1	E	4150	THR
1	E	4153	VAL
1	E	4168	ARG
1	E	4169	TYR
1	E	4172	TYR
1	E	4178	ARG
1	E	4194	ASN
1	E	4195	TYR
1	E	4198	GLU
1	E	4199	SER
1	E	4203	LEU
1	E	4205	MET
1	E	4221	VAL
1	E	4223	ARG
1	E	4225	GLN
1	E	4228	ILE
1	E	4236	GLN
1	E	4245	VAL

Continued on next page...

Continued from previous page...

Mol	Chain	Res	Type
1	F	5005	ASP
1	F	5006	VAL
1	F	5007	PHE
1	F	5011	LEU
1	F	5021	LEU
1	F	5037	LEU
1	F	5043	LYS
1	F	5049	GLU
1	F	5050	PHE
1	F	5056	GLU
1	F	5062	VAL
1	F	5080	GLU
1	F	5091	ARG
1	F	5092	ILE
1	F	5094	THR
1	F	5099	GLN
1	F	5137	THR
1	F	5138	THR
1	F	5140	LEU
1	F	5145	LYS
1	F	5155	VAL
1	F	5163	TYR
1	F	5178	ARG
1	F	5193	MET
1	F	5194	ASN
1	F	5196	GLU
1	F	5202	LEU
1	F	5205	MET
1	F	5211	LEU
1	F	5216	VAL
1	F	5225	GLN
1	F	5235	LYS

Sometimes sidechains can be flipped to improve hydrogen bonding and reduce clashes. All (24) such sidechains are listed below:

Mol	Chain	Res	Type
1	A	101	HIS
1	A	188	GLN
1	B	1017	GLN
1	B	1179	HIS
1	B	1188	GLN
1	B	1226	GLN

Continued on next page...

Continued from previous page...

Mol	Chain	Res	Type
1	B	1236	GLN
1	C	2152	HIS
1	C	2179	HIS
1	C	2225	GLN
1	C	2240	HIS
1	D	3099	GLN
1	D	3166	GLN
1	D	3194	ASN
1	D	3230	ASN
1	D	3236	GLN
1	E	4008	HIS
1	E	4101	HIS
1	E	4179	HIS
1	E	4226	GLN
1	F	5008	HIS
1	F	5122	HIS
1	F	5152	HIS
1	F	5240	HIS

5.3.3 RNA (i)

There are no RNA molecules in this entry.

5.4 Non-standard residues in protein, DNA, RNA chains (i)

There are no non-standard protein/DNA/RNA residues in this entry.

5.5 Carbohydrates (i)

There are no monosaccharides in this entry.

5.6 Ligand geometry (i)

There are no ligands in this entry.

5.7 Other polymers (i)

There are no such residues in this entry.

5.8 Polymer linkage issues (i)

There are no chain breaks in this entry.

6 Fit of model and data (i)

6.1 Protein, DNA and RNA chains (i)

EDS was not executed - this section is therefore empty.

6.2 Non-standard residues in protein, DNA, RNA chains (i)

EDS was not executed - this section is therefore empty.

6.3 Carbohydrates (i)

EDS was not executed - this section is therefore empty.

6.4 Ligands (i)

EDS was not executed - this section is therefore empty.

6.5 Other polymers (i)

EDS was not executed - this section is therefore empty.