Full wwPDB X-ray Structure Validation Report (i)

Apr 27, 2024 – 12:53 pm BST

PDB ID	:	2JFD
Title	:	Structure of the MAT domain of human FAS
Authors	:	Bunkoczi, G.; Kavanagh, K.; Hozjan, V.; Rojkova, A.; Wu, X.; Arrowsmith, C.H.; Edwards, A.; Sundstrom, M.; Weigelt, J.; Smith, S.; Oppermann, U.
Deposited on	:	2007-01-31
Resolution	:	2.81 Å(reported)

This is a Full wwPDB X-ray Structure Validation Report for a publicly released PDB entry.

We welcome your comments at *validation@mail.wwpdb.org*
A user guide is available at
https://www.wwpdb.org/validation/2017/XrayValidationReportHelp
with specific help available everywhere you see the (i) symbol.

The types of validation reports are described at
http://www.wwpdb.org/validation/2017/FAQs#types.

The following versions of software and data (see references (1)) were used in the production of this report:

MolProbity	:	4.02b-467
Xtriage (Phenix)	:	1.13
EDS	:	2.36.2
Percentile statistics	:	20191225.v01 (using entries in the PDB archive December 25th 2019)
Refmac	:	5.8.0158
CCP4	:	7.0.044 (Gargrove)
Ideal geometry (proteins)	:	Engh & Huber (2001)
Ideal geometry (DNA, RNA)	:	Parkinson et al. (1996)
Validation Pipeline (wwPDB-VP)	:	2.36.2

1 Overall quality at a glance (i)

The following experimental techniques were used to determine the structure:
X-RAY DIFFRACTION

The reported resolution of this entry is 2.81 Å.

Percentile scores (ranging between 0-100) for global validation metrics of the entry are shown in the following graphic. The table shows the number of entries on which the scores are based.

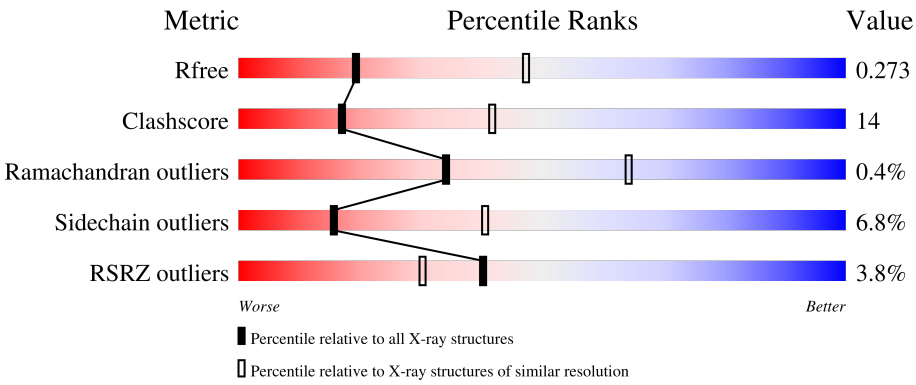

Metric	Whole archive (#Entries)	Similar resolution (#Entries, resolution range(Å))
R_{free}	130704	3617 (2.84-2.80)
Clashscore	141614	4060 (2.84-2.80)
Ramachandran outliers	138981	3978 (2.84-2.80)
Sidechain outliers	138945	3980 (2.84-2.80)
RSRZ outliers	127900	3552 (2.84-2.80)

The table below summarises the geometric issues observed across the polymeric chains and their fit to the electron density. The red, orange, yellow and green segments of the lower bar indicate the fraction of residues that contain outliers for >=3, 2, 1 and 0 types of geometric quality criteria respectively. A grey segment represents the fraction of residues that are not modelled. The numeric value for each fraction is indicated below the corresponding segment, with a dot representing fractions <=5% The upper red bar (where present) indicates the fraction of residues that have poor fit to the electron density. The numeric value is given above the bar.

Mol	Chain	Length	Quality of chain
1	A	425	.% 72% 21% • 5%
1	B	425	6% 69% 25% 6%
1	C	425	.% 72% 21% • 5%
1	D	425	7% 72% 20% • 6%

2 Entry composition (i)

There are 2 unique types of molecules in this entry. The entry contains 11392 atoms, of which 0 are hydrogens and 0 are deuteriums.

In the tables below, the ZeroOcc column contains the number of atoms modelled with zero occupancy, the AltConf column contains the number of residues with at least one atom in alternate conformation and the Trace column contains the number of residues modelled with at most 2 atoms.

- Molecule 1 is a protein called FATTY ACID SYNTHASE.

Mol	Chain	Residues	Atoms					ZeroOcc	AltConf	Trace
			Total	C	N	O	S			
1	A	404	2929	1869	503	537	20	0	0	0
1	B	400	2840	1823	475	523	19	0	0	0
1	C	403	2899	1856	504	520	19	0	1	0
1	D	399	2709	1708	476	508	17	0	0	0

There are 92 discrepancies between the modelled and reference sequences:

Chain	Residue	Modelled	Actual	Comment	Reference
A	399	MET	-	expression tag	UNP P49327
A	400	HIS	-	expression tag	UNP P49327
A	401	HIS	-	expression tag	UNP P49327
A	402	HIS	-	expression tag	UNP P49327
A	403	HIS	-	expression tag	UNP P49327
A	404	HIS	-	expression tag	UNP P49327
A	405	HIS	-	expression tag	UNP P49327
A	406	SER	-	expression tag	UNP P49327
A	407	SER	-	expression tag	UNP P49327
A	408	GLY	-	expression tag	UNP P49327
A	409	VAL	-	expression tag	UNP P49327
A	410	ASP	-	expression tag	UNP P49327
A	411	LEU	-	expression tag	UNP P49327
A	412	GLY	-	expression tag	UNP P49327
A	413	THR	-	expression tag	UNP P49327
A	414	GLU	-	expression tag	UNP P49327
A	415	ASN	-	expression tag	UNP P49327
A	416	LEU	-	expression tag	UNP P49327
A	417	TYR	-	expression tag	UNP P49327
A	418	PHE	-	expression tag	UNP P49327
A	419	GLN	-	expression tag	UNP P49327

Continued on next page...

Continued from previous page...

Chain	Residue	Modelled	Actual	Comment	Reference
A	420	SER	-	expression tag	UNP P49327
A	421	MET	-	expression tag	UNP P49327
B	399	MET	-	expression tag	UNP P49327
B	400	HIS	-	expression tag	UNP P49327
B	401	HIS	-	expression tag	UNP P49327
B	402	HIS	-	expression tag	UNP P49327
B	403	HIS	-	expression tag	UNP P49327
B	404	HIS	-	expression tag	UNP P49327
B	405	HIS	-	expression tag	UNP P49327
B	406	SER	-	expression tag	UNP P49327
B	407	SER	-	expression tag	UNP P49327
B	408	GLY	-	expression tag	UNP P49327
B	409	VAL	-	expression tag	UNP P49327
B	410	ASP	-	expression tag	UNP P49327
B	411	LEU	-	expression tag	UNP P49327
B	412	GLY	-	expression tag	UNP P49327
B	413	THR	-	expression tag	UNP P49327
B	414	GLU	-	expression tag	UNP P49327
B	415	ASN	-	expression tag	UNP P49327
B	416	LEU	-	expression tag	UNP P49327
B	417	TYR	-	expression tag	UNP P49327
B	418	PHE	-	expression tag	UNP P49327
B	419	GLN	-	expression tag	UNP P49327
B	420	SER	-	expression tag	UNP P49327
B	421	MET	-	expression tag	UNP P49327
C	399	MET	-	expression tag	UNP P49327
C	400	HIS	-	expression tag	UNP P49327
C	401	HIS	-	expression tag	UNP P49327
C	402	HIS	-	expression tag	UNP P49327
C	403	HIS	-	expression tag	UNP P49327
C	404	HIS	-	expression tag	UNP P49327
C	405	HIS	-	expression tag	UNP P49327
C	406	SER	-	expression tag	UNP P49327
C	407	SER	-	expression tag	UNP P49327
C	408	GLY	-	expression tag	UNP P49327
C	409	VAL	-	expression tag	UNP P49327
C	410	ASP	-	expression tag	UNP P49327
C	411	LEU	-	expression tag	UNP P49327
C	412	GLY	-	expression tag	UNP P49327
C	413	THR	-	expression tag	UNP P49327
C	414	GLU	-	expression tag	UNP P49327
C	415	ASN	-	expression tag	UNP P49327

Continued on next page...

Continued from previous page...

Chain	Residue	Modelled	Actual	Comment	Reference
C	416	LEU	-	expression tag	UNP P49327
C	417	TYR	-	expression tag	UNP P49327
C	418	PHE	-	expression tag	UNP P49327
C	419	GLN	-	expression tag	UNP P49327
C	420	SER	-	expression tag	UNP P49327
C	421	MET	-	expression tag	UNP P49327
D	399	MET	-	expression tag	UNP P49327
D	400	HIS	-	expression tag	UNP P49327
D	401	HIS	-	expression tag	UNP P49327
D	402	HIS	-	expression tag	UNP P49327
D	403	HIS	-	expression tag	UNP P49327
D	404	HIS	-	expression tag	UNP P49327
D	405	HIS	-	expression tag	UNP P49327
D	406	SER	-	expression tag	UNP P49327
D	407	SER	-	expression tag	UNP P49327
D	408	GLY	-	expression tag	UNP P49327
D	409	VAL	-	expression tag	UNP P49327
D	410	ASP	-	expression tag	UNP P49327
D	411	LEU	-	expression tag	UNP P49327
D	412	GLY	-	expression tag	UNP P49327
D	413	THR	-	expression tag	UNP P49327
D	414	GLU	-	expression tag	UNP P49327
D	415	ASN	-	expression tag	UNP P49327
D	416	LEU	-	expression tag	UNP P49327
D	417	TYR	-	expression tag	UNP P49327
D	418	PHE	-	expression tag	UNP P49327
D	419	GLN	-	expression tag	UNP P49327
D	420	SER	-	expression tag	UNP P49327
D	421	MET	-	expression tag	UNP P49327

- Molecule 2 is water.

Mol	Chain	Residues	Atoms		ZeroOcc	AltConf
			Total	O		
2	A	3	3	3	0	0
			Total	O		
2	B	3	3	3	0	0
			Total	O		
2	C	9	9	9	0	0

3 Residue-property plots (i)

These plots are drawn for all protein, RNA, DNA and oligosaccharide chains in the entry. The first graphic for a chain summarises the proportions of the various outlier classes displayed in the second graphic. The second graphic shows the sequence view annotated by issues in geometry and electron density. Residues are color-coded according to the number of geometric quality criteria for which they contain at least one outlier: green = 0, yellow = 1, orange = 2 and red = 3 or more. A red dot above a residue indicates a poor fit to the electron density (RSRZ > 2). Stretches of 2 or more consecutive residues without any outlier are shown as a green connector. Residues present in the sample, but not in the model, are shown in grey.

• Molecule 1: FATTY ACID SYNTHASE

Chain A:

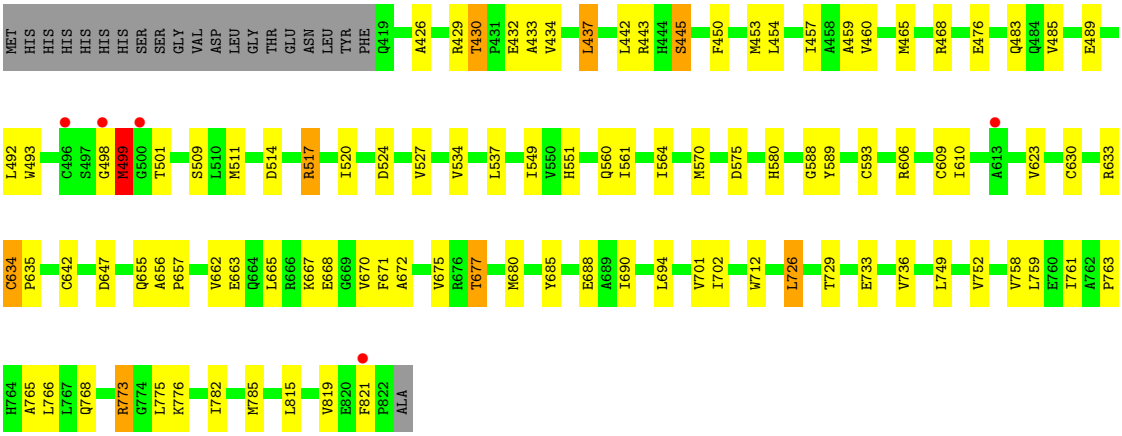

• Molecule 1: FATTY ACID SYNTHASE

Chain B:

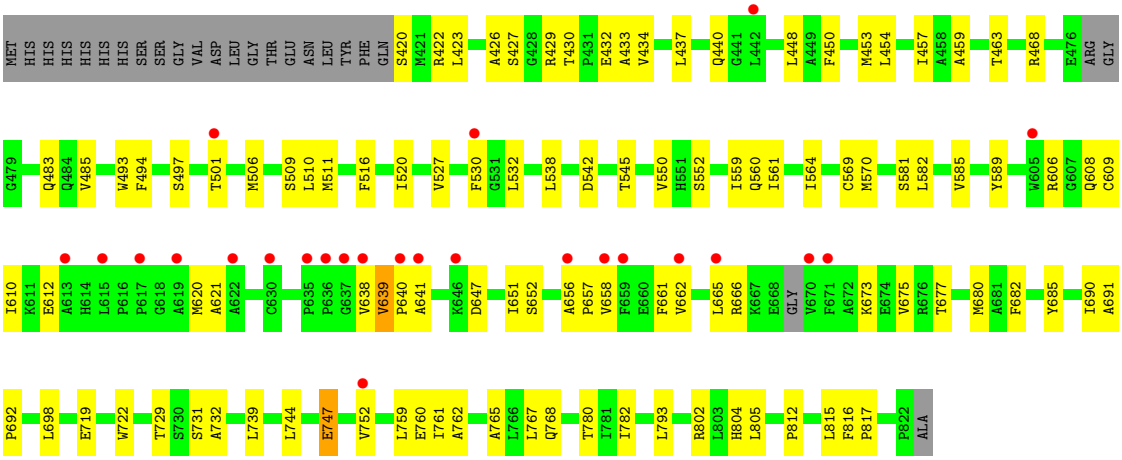

• Molecule 1: FATTY ACID SYNTHASE

Chain C:

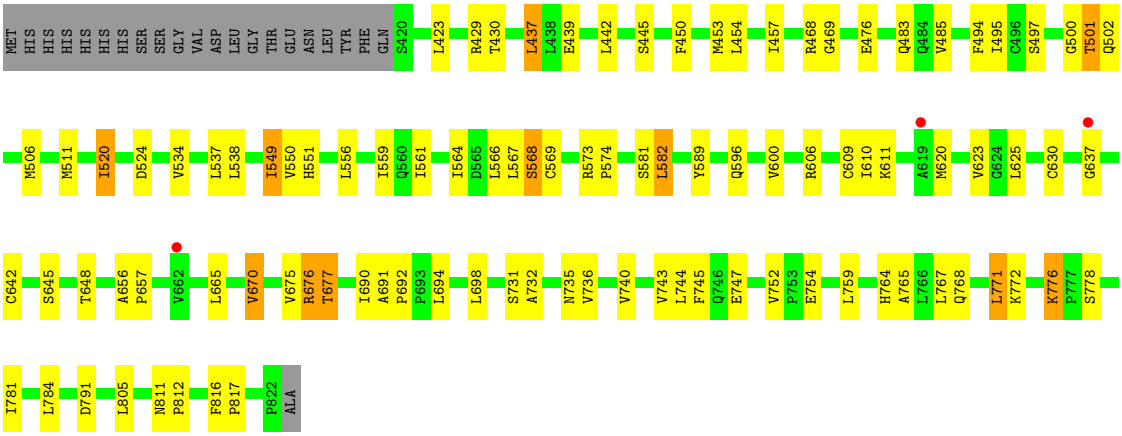

- Molecule 1: FATTY ACID SYNTHASE

Chain D: 7% 72% 20% 6%

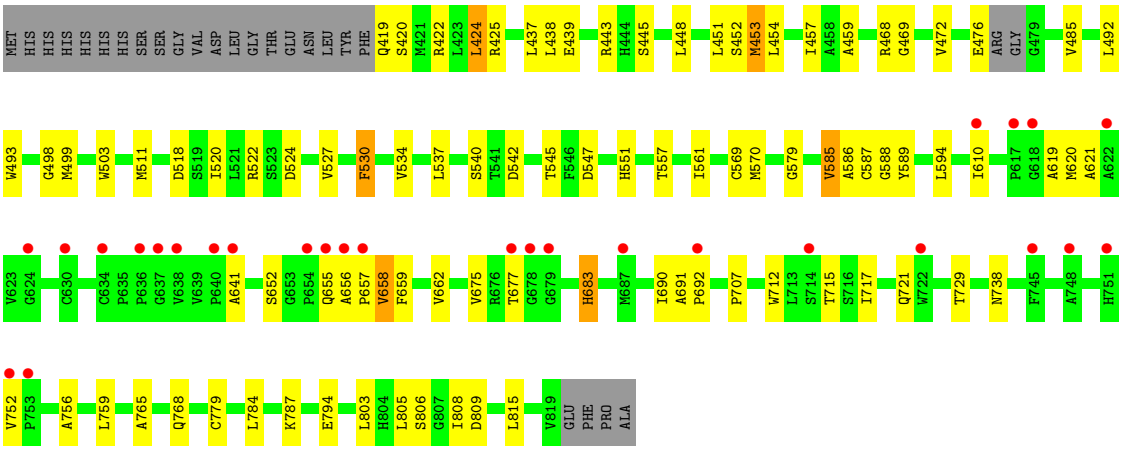

4 Data and refinement statistics (i)

Property	Value	Source
Space group	P 21 21 21	Depositor
Cell constants a, b, c, α, β, γ	85.98Å 92.69Å 259.87Å 90.00° 90.00° 90.00°	Depositor
Resolution (Å)	45.22 – 2.81 42.41 – 2.81	Depositor EDS
% Data completeness (in resolution range)	81.0 (45.22-2.81) 81.0 (42.41-2.81)	Depositor EDS
R_{merge}	0.05	Depositor
R_{sym}	(Not available)	Depositor
$< I/\sigma(I) >$ [1]	4.25 (at 2.81Å)	Xtriage
Refinement program	REFMAC 5.2.0019	Depositor
R, R_{free}	0.212 , 0.273 0.221 , 0.273	Depositor DCC
R_{free} test set	2074 reflections (4.96%)	wwPDB-VP
Wilson B-factor (Å^2)	74.5	Xtriage
Anisotropy	0.160	Xtriage
Bulk solvent k_{sol}(e/Å^3), B_{sol}(Å^2)	0.33 , 107.1	EDS
L-test for twinning[2]	$< \|L\| > = 0.45$, $< L^2 > = 0.28$	Xtriage
Estimated twinning fraction	No twinning to report.	Xtriage
F_o,F_c correlation	0.93	EDS
Total number of atoms	11392	wwPDB-VP
Average B, all atoms (Å^2)	42.0	wwPDB-VP

Xtriage's analysis on translational NCS is as follows: *The largest off-origin peak in the Patterson function is 2.88% of the height of the origin peak. No significant pseudotranslation is detected.*

[1] Intensities estimated from amplitudes.

[2] Theoretical values of $< |L| >$, $< L^2 >$ for acentric reflections are 0.5, 0.333 respectively for untwinned datasets, and 0.375, 0.2 for perfectly twinned datasets.

5 Model quality (i)

5.1 Standard geometry (i)

The Z score for a bond length (or angle) is the number of standard deviations the observed value is removed from the expected value. A bond length (or angle) with $|Z| > 5$ is considered an outlier worth inspection. RMSZ is the root-mean-square of all Z scores of the bond lengths (or angles).

Mol	Chain	Bond lengths		Bond angles	
		RMSZ	$\#\|Z\|>5$	RMSZ	$\#\|Z\|>5$
1	A	0.56	1/3003 (0.0%)	0.69	1/4107 (0.0%)
1	B	0.49	0/2910	0.63	0/3985
1	C	0.57	1/2975 (0.0%)	0.66	0/4069
1	D	0.45	0/2769	0.59	0/3799
All	All	0.52	2/11657 (0.0%)	0.64	1/15960 (0.0%)

Chiral center outliers are detected by calculating the chiral volume of a chiral center and verifying if the center is modelled as a planar moiety or with the opposite hand.A planarity outlier is detected by checking planarity of atoms in a peptide group, atoms in a mainchain group or atoms of a sidechain that are expected to be planar.

Mol	Chain	#Chirality outliers	#Planarity outliers
1	A	0	1
1	C	0	1
All	All	0	2

All (2) bond length outliers are listed below:

Mol	Chain	Res	Type	Atoms	Z	Observed(Å)	Ideal(Å)
1	A	642	CYS	CB-SG	-6.90	1.70	1.82
1	C	642	CYS	CB-SG	-5.79	1.72	1.81

All (1) bond angle outliers are listed below:

Mol	Chain	Res	Type	Atoms	Z	Observed(^{o})	Ideal(^{o})
1	A	499	MET	CG-SD-CE	6.10	109.96	100.20

There are no chirality outliers.

All (2) planarity outliers are listed below:

Mol	Chain	Res	Type	Group
1	A	476	GLU	Peptide

Continued on next page...

Continued from previous page...

Mol	Chain	Res	Type	Group
1	C	476	GLU	Peptide

5.2 Too-close contacts (i)

In the following table, the Non-H and H(model) columns list the number of non-hydrogen atoms and hydrogen atoms in the chain respectively. The H(added) column lists the number of hydrogen atoms added and optimized by MolProbity. The Clashes column lists the number of clashes within the asymmetric unit, whereas Symm-Clashes lists symmetry-related clashes.

Mol	Chain	Non-H	H(model)	H(added)	Clashes	Symm-Clashes
1	A	2929	0	2774	82	0
1	B	2840	0	2643	96	0
1	C	2899	0	2757	76	0
1	D	2709	0	2400	70	0
2	A	3	0	0	0	0
2	B	3	0	0	0	0
2	C	9	0	0	0	0
All	All	11392	0	10574	308	0

The all-atom clashscore is defined as the number of clashes found per 1000 atoms (including hydrogen atoms). The all-atom clashscore for this structure is 14.

All (308) close contacts within the same asymmetric unit are listed below, sorted by their clash magnitude.

Atom-1	Atom-2	Interatomic distance (Å)	Clash overlap (Å)
1:B:453:MET:O	1:B:457:ILE:HD12	1.53	1.05
1:A:468:ARG:HD3	1:A:485:VAL:HG21	1.37	1.03
1:A:694:LEU:HD23	1:A:736:VAL:HG22	1.38	1.02
1:D:570:MET:CE	1:D:815:LEU:HD11	1.92	0.98
1:C:453:MET:CE	1:D:437:LEU:HD23	1.94	0.97
1:D:675:VAL:HG23	1:D:677:THR:HG23	1.47	0.94
1:C:468:ARG:HD3	1:C:485:VAL:HG21	1.50	0.94
1:A:450:PHE:O	1:A:454:LEU:HD12	1.72	0.90
1:C:453:MET:HE1	1:D:437:LEU:HD23	1.53	0.89
1:B:468:ARG:HD3	1:B:485:VAL:HG21	1.53	0.89
1:B:506:MET:HE3	1:B:559:ILE:HD12	1.58	0.86
1:B:560:GLN:O	1:B:564:ILE:HD12	1.75	0.86
1:D:453:MET:CE	1:D:454:LEU:HD23	2.04	0.86
1:A:675:VAL:HG12	1:A:677:THR:HG22	1.56	0.85
1:A:570:MET:HE1	1:A:815:LEU:HD11	1.59	0.85

Continued on next page...

Continued from previous page...

Atom-1	Atom-2	Interatomic distance (Å)	Clash overlap (Å)
1:A:749:LEU:HD22	1:A:775:LEU:HD21	1.61	0.79
1:D:527:VAL:HG12	1:D:527:VAL:O	1.81	0.79
1:D:765:ALA:HB1	1:D:768:GLN:HG2	1.63	0.78
1:A:457:ILE:CG2	1:B:457:ILE:HG21	2.13	0.77
1:B:570:MET:HE3	1:B:815:LEU:HD11	1.64	0.77
1:D:453:MET:HE1	1:D:454:LEU:HD23	1.64	0.77
1:B:570:MET:HE2	1:B:815:LEU:HG	1.65	0.77
1:C:423:LEU:HD23	1:C:812:PRO:HG3	1.66	0.77
1:A:610:ILE:HG23	1:A:680:MET:HE1	1.69	0.75
1:A:570:MET:HE2	1:A:815:LEU:HD21	1.68	0.75
1:D:656:ALA:HB3	1:D:657:PRO:HD3	1.70	0.74
1:A:457:ILE:HG23	1:B:457:ILE:HG21	1.68	0.73
1:D:759:LEU:HD22	1:D:784:LEU:HD21	1.71	0.73
1:B:610:ILE:HG23	1:B:680:MET:CE	2.19	0.72
1:D:619:ALA:HB3	1:D:658:VAL:HG21	1.69	0.72
1:D:468:ARG:HD3	1:D:485:VAL:HG21	1.70	0.72
1:C:754:GLU:O	1:C:778:SER:OG	2.04	0.72
1:A:527:VAL:HG12	1:A:527:VAL:O	1.89	0.71
1:C:765:ALA:HB1	1:C:768:GLN:HG2	1.72	0.71
1:D:691:ALA:HB3	1:D:692:PRO:HD3	1.73	0.70
1:A:459:ALA:HB3	1:B:429:ARG:NH1	2.07	0.70
1:D:570:MET:HE2	1:D:815:LEU:CG	2.22	0.70
1:B:691:ALA:HB3	1:B:692:PRO:HD3	1.72	0.70
1:C:582:LEU:HD12	1:C:582:LEU:O	1.92	0.70
1:B:610:ILE:HG23	1:B:680:MET:HE1	1.72	0.70
1:D:570:MET:HE2	1:D:815:LEU:HD11	1.72	0.70
1:B:550:VAL:HG21	1:B:608:GLN:OE1	1.91	0.69
1:A:468:ARG:CD	1:A:485:VAL:HG21	2.19	0.69
1:B:453:MET:O	1:B:457:ILE:CD1	2.36	0.68
1:D:537:LEU:HD21	1:D:551:HIS:CD2	2.29	0.68
1:C:675:VAL:HG12	1:C:675:VAL:O	1.93	0.68
1:C:694:LEU:HD23	1:C:736:VAL:HG22	1.75	0.67
1:B:527:VAL:HG12	1:B:532:LEU:HB2	1.77	0.67
1:A:570:MET:CE	1:A:815:LEU:HD11	2.23	0.67
1:A:588:GLY:HA2	1:A:712:TRP:CZ3	2.30	0.66
1:B:661:PHE:CZ	1:B:665:LEU:HD11	2.31	0.66
1:B:739:LEU:HD12	1:B:739:LEU:O	1.94	0.66
1:D:570:MET:HE2	1:D:815:LEU:CD1	2.25	0.66
1:B:638:VAL:HG13	1:B:658:VAL:HG22	1.77	0.66
1:C:561:ILE:HG23	1:C:589:TYR:CE2	2.31	0.65
1:D:570:MET:CE	1:D:815:LEU:CD1	2.72	0.65

Continued on next page...

Continued from previous page...

Atom-1	Atom-2	Interatomic distance (Å)	Clash overlap (Å)
1:C:610:ILE:HA	1:C:690:ILE:HD13	1.79	0.65
1:B:765:ALA:HB1	1:B:768:GLN:HG2	1.77	0.65
1:A:450:PHE:CE2	1:A:454:LEU:HD11	2.31	0.64
1:A:610:ILE:HG23	1:A:680:MET:CE	2.27	0.64
1:C:423:LEU:HD23	1:C:812:PRO:CG	2.27	0.64
1:C:759:LEU:HD22	1:C:784:LEU:HD21	1.79	0.64
1:C:453:MET:CE	1:D:437:LEU:CD2	2.73	0.64
1:A:454:LEU:HA	1:A:457:ILE:HD12	1.79	0.63
1:A:537:LEU:HD21	1:A:551:HIS:CD2	2.32	0.63
1:C:429:ARG:NH1	1:D:459:ALA:HB1	2.14	0.63
1:A:429:ARG:NH2	1:B:459:ALA:HB3	2.13	0.63
1:D:527:VAL:O	1:D:527:VAL:CG1	2.45	0.63
1:A:564:ILE:CD1	1:A:761:ILE:HG21	2.28	0.63
1:B:506:MET:O	1:B:538:LEU:HD22	1.99	0.63
1:C:537:LEU:HD21	1:C:551:HIS:CD2	2.35	0.62
1:A:675:VAL:HG12	1:A:677:THR:CG2	2.30	0.62
1:B:759:LEU:HD23	1:B:782:ILE:HB	1.82	0.62
1:B:621:ALA:HA	1:B:675:VAL:HG23	1.82	0.61
1:A:606:ARG:O	1:A:610:ILE:HD12	2.01	0.61
1:B:610:ILE:CG2	1:B:680:MET:HE1	2.31	0.61
1:A:610:ILE:CG2	1:A:680:MET:HE1	2.30	0.61
1:A:662:VAL:HG13	1:A:672:ALA:HB1	1.82	0.61
1:C:556:LEU:O	1:C:556:LEU:HD12	2.01	0.61
1:A:647:ASP:OD1	1:A:773:ARG:NH1	2.33	0.61
1:A:819:VAL:HG12	1:A:819:VAL:O	2.00	0.60
1:D:621:ALA:HA	1:D:675:VAL:HG13	1.83	0.60
1:A:765:ALA:HB1	1:A:768:GLN:HG2	1.81	0.60
1:C:511:MET:HE1	1:C:520:ILE:HG21	1.83	0.60
1:A:460:VAL:HG11	1:A:465:MET:SD	2.41	0.59
1:A:457:ILE:HG23	1:B:457:ILE:CG2	2.32	0.59
1:B:610:ILE:CG2	1:B:680:MET:CE	2.81	0.59
1:D:610:ILE:HA	1:D:690:ILE:HD13	1.83	0.59
1:D:469:GLY:HA2	1:D:805:LEU:HD21	1.85	0.59
1:D:570:MET:HE2	1:D:815:LEU:HG	1.84	0.59
1:A:429:ARG:HH22	1:B:459:ALA:HB3	1.68	0.59
1:B:690:ILE:HG22	1:B:690:ILE:O	2.03	0.58
1:D:424:LEU:HD12	1:D:425:ARG:N	2.18	0.58
1:B:426:ALA:HB1	1:B:437:LEU:HD23	1.85	0.57
1:D:492:LEU:HD11	1:D:759:LEU:HD12	1.86	0.57
1:C:469:GLY:HA2	1:C:805:LEU:HD21	1.86	0.57
1:D:570:MET:HE1	1:D:815:LEU:HD11	1.82	0.57

Continued on next page...

Continued from previous page...

Atom-1	Atom-2	Interatomic distance (Å)	Clash overlap (Å)
1:B:620:MET:HB2	1:B:677:THR:HG21	1.87	0.57
1:B:639:VAL:HG22	1:B:640:PRO:HD2	1.86	0.57
1:A:561:ILE:HG23	1:A:589:TYR:CE1	2.40	0.56
1:B:527:VAL:HG12	1:B:527:VAL:O	2.05	0.56
1:D:503:TRP:CE2	1:D:787:LYS:HA	2.40	0.56
1:D:511:MET:HE3	1:D:520:ILE:HB	1.87	0.56
1:B:570:MET:CE	1:B:812:PRO:HA	2.36	0.56
1:A:511:MET:HE1	1:A:520:ILE:HB	1.88	0.56
1:C:675:VAL:O	1:C:677:THR:HG22	2.05	0.56
1:B:719:GLU:HA	1:B:722:TRP:CD2	2.41	0.55
1:C:691:ALA:HB3	1:C:692:PRO:HD3	1.88	0.55
1:D:453:MET:CE	1:D:454:LEU:CD2	2.83	0.55
1:A:457:ILE:HG21	1:B:457:ILE:HG21	1.86	0.55
1:A:759:LEU:HD23	1:A:782:ILE:HB	1.88	0.55
1:C:429:ARG:HH12	1:D:459:ALA:HB1	1.71	0.55
1:A:609:CYS:HB3	1:A:690:ILE:CG2	2.36	0.55
1:C:752:VAL:O	1:C:776:LYS:HE3	2.04	0.55
1:C:442:LEU:O	1:C:445:SER:OG	2.23	0.55
1:D:641:ALA:HB2	1:D:652:SER:HB3	1.88	0.54
1:A:437:LEU:CD2	1:A:454:LEU:HD23	2.37	0.54
1:B:638:VAL:CG1	1:B:658:VAL:HG22	2.38	0.54
1:D:542:ASP:O	1:D:545:THR:HG22	2.07	0.54
1:D:422:ARG:NH2	1:D:448:LEU:HD23	2.23	0.54
1:C:468:ARG:HD3	1:C:485:VAL:CG2	2.32	0.54
1:B:656:ALA:HB3	1:B:657:PRO:HD3	1.88	0.54
1:B:527:VAL:CG1	1:B:532:LEU:HB2	2.37	0.54
1:A:749:LEU:HD22	1:A:775:LEU:CD2	2.32	0.54
1:C:494:PHE:CD1	1:C:574:PRO:HB3	2.43	0.54
1:D:511:MET:HE1	1:D:520:ILE:HG21	1.90	0.54
1:A:610:ILE:CG2	1:A:680:MET:CE	2.86	0.53
1:C:665:LEU:O	1:C:670:VAL:HG23	2.07	0.53
1:A:450:PHE:CD2	1:A:454:LEU:HD11	2.44	0.53
1:B:680:MET:HB3	1:B:682:PHE:CE1	2.44	0.53
1:B:816:PHE:HB3	1:B:817:PRO:CD	2.38	0.53
1:C:767:LEU:O	1:C:771:LEU:HB2	2.08	0.53
1:D:453:MET:HE1	1:D:454:LEU:CD2	2.35	0.53
1:B:608:GLN:O	1:B:612:GLU:HG3	2.09	0.53
1:B:638:VAL:CG1	1:B:651:ILE:HD12	2.39	0.53
1:B:497:SER:OG	1:B:767:LEU:HD23	2.10	0.52
1:C:501:THR:HG21	1:C:764:HIS:O	2.10	0.52
1:A:524:ASP:OD1	1:A:534:VAL:HG23	2.09	0.52

Continued on next page...

Continued from previous page...

Atom-1	Atom-2	Interatomic distance (Å)	Clash overlap (Å)
1:C:442:LEU:O	1:C:442:LEU:HD12	2.09	0.52
1:B:485:VAL:HG22	1:B:805:LEU:O	2.09	0.52
1:C:524:ASP:OD2	1:C:534:VAL:N	2.42	0.52
1:D:453:MET:HE3	1:D:457:ILE:HD12	1.92	0.52
1:D:675:VAL:CG2	1:D:677:THR:HG23	2.29	0.52
1:D:658:VAL:HG12	1:D:659:PHE:N	2.24	0.52
1:B:494:PHE:HB3	1:B:761:ILE:HD12	1.91	0.51
1:D:468:ARG:CD	1:D:485:VAL:HG21	2.37	0.51
1:B:680:MET:HG2	1:B:682:PHE:CZ	2.45	0.51
1:D:620:MET:O	1:D:675:VAL:HG22	2.11	0.51
1:A:426:ALA:HB3	1:A:434:VAL:HG13	1.92	0.51
1:A:430:THR:HG22	1:A:433:ALA:H	1.75	0.51
1:A:560:GLN:O	1:A:564:ILE:HD13	2.11	0.51
1:C:439:GLU:OE2	1:C:439:GLU:HA	2.11	0.51
1:A:663:GLU:O	1:A:667:LYS:HG2	2.11	0.51
1:C:744:LEU:HB3	1:C:747:GLU:CG	2.41	0.51
1:B:561:ILE:HG23	1:B:589:TYR:CE2	2.46	0.50
1:A:499:MET:SD	1:A:580:HIS:HE1	2.35	0.50
1:B:641:ALA:HB2	1:B:652:SER:HB3	1.92	0.50
1:D:717:ILE:HG21	1:D:721:GLN:O	2.11	0.50
1:B:432:GLU:CD	1:B:432:GLU:H	2.15	0.50
1:A:430:THR:CG2	1:A:433:ALA:H	2.25	0.50
1:B:497:SER:HB2	1:B:762:ALA:HB2	1.94	0.50
1:C:581:SER:OG	1:C:582:LEU:N	2.44	0.50
1:A:690:ILE:O	1:A:690:ILE:HG22	2.11	0.50
1:B:582:LEU:O	1:B:585:VAL:HG23	2.12	0.50
1:B:457:ILE:O	1:B:457:ILE:HG22	2.12	0.49
1:A:702:ILE:N	1:A:702:ILE:HD12	2.27	0.49
1:C:623:VAL:HG12	1:C:625:LEU:H	1.78	0.49
1:D:453:MET:HE3	1:D:457:ILE:CD1	2.42	0.49
1:C:453:MET:HE3	1:D:437:LEU:CD2	2.41	0.49
1:C:453:MET:HE1	1:D:437:LEU:CD2	2.32	0.49
1:C:511:MET:CE	1:C:520:ILE:HG21	2.43	0.48
1:C:596:GLN:O	1:C:600:VAL:HG23	2.12	0.48
1:A:668:GLU:HG3	1:A:670:VAL:HG23	1.95	0.48
1:D:492:LEU:HD11	1:D:759:LEU:CD1	2.43	0.48
1:B:506:MET:HE3	1:B:559:ILE:CD1	2.38	0.48
1:B:570:MET:HE1	1:B:812:PRO:HA	1.95	0.48
1:D:453:MET:HE3	1:D:454:LEU:HD23	1.93	0.48
1:A:468:ARG:HD3	1:A:485:VAL:CG2	2.27	0.48
1:B:570:MET:HE2	1:B:815:LEU:CG	2.41	0.48

Continued on next page...

Continued from previous page...

Atom-1	Atom-2	Interatomic distance (Å)	Clash overlap (Å)
1:C:698:LEU:HB2	1:C:732:ALA:HB1	1.96	0.48
1:A:685:TYR:O	1:A:688:GLU:HB2	2.14	0.48
1:D:588:GLY:HA3	1:D:594:LEU:HD12	1.96	0.47
1:B:782:ILE:HD13	1:B:802:ARG:HB2	1.97	0.47
1:D:472:VAL:HG11	1:D:794:GLU:HG3	1.97	0.47
1:C:609:CYS:HB3	1:C:690:ILE:HG23	1.97	0.47
1:A:670:VAL:HG12	1:A:671:PHE:N	2.29	0.47
1:B:423:LEU:HD23	1:B:812:PRO:HG3	1.97	0.47
1:B:620:MET:O	1:B:675:VAL:N	2.46	0.47
1:C:485:VAL:HG22	1:C:805:LEU:O	2.15	0.47
1:C:564:ILE:O	1:C:568:SER:OG	2.31	0.47
1:D:469:GLY:CA	1:D:805:LEU:HD21	2.44	0.47
1:A:656:ALA:HB3	1:A:657:PRO:HD3	1.96	0.47
1:B:483:GLN:HG2	1:B:805:LEU:HD13	1.95	0.47
1:B:685:TYR:CE2	1:C:637:GLY:HA2	2.50	0.47
1:C:506:MET:HE2	1:C:559:ILE:HD12	1.97	0.47
1:B:542:ASP:O	1:B:545:THR:HG22	2.14	0.47
1:D:585:VAL:HG12	1:D:586:ALA:N	2.30	0.47
1:B:450:PHE:CZ	1:B:454:LEU:HD11	2.50	0.46
1:C:511:MET:HE3	1:C:520:ILE:HB	1.96	0.46
1:C:731:SER:O	1:C:735:ASN:OD1	2.33	0.46
1:C:791:ASP:C	1:C:791:ASP:OD1	2.53	0.46
1:A:437:LEU:HD22	1:A:454:LEU:HD23	1.97	0.46
1:A:450:PHE:HA	1:A:453:MET:HE1	1.98	0.46
1:C:500:GLY:C	1:C:502:GLN:H	2.18	0.46
1:C:437:LEU:HD12	1:C:437:LEU:O	2.15	0.46
1:C:453:MET:O	1:C:457:ILE:HD13	2.15	0.46
1:D:448:LEU:HD12	1:D:448:LEU:H	1.81	0.46
1:A:623:VAL:HG13	1:A:665:LEU:CD1	2.45	0.46
1:B:430:THR:HG23	1:B:433:ALA:H	1.79	0.46
1:B:581:SER:OG	1:B:582:LEU:N	2.39	0.46
1:D:579:GLY:O	1:D:715:THR:HG21	2.16	0.46
1:D:683:HIS:HD1	1:D:683:HIS:N	2.13	0.46
1:C:745:PHE:CZ	1:C:767:LEU:HD13	2.51	0.46
1:A:656:ALA:HB3	1:A:657:PRO:CD	2.46	0.46
1:B:638:VAL:HG11	1:B:651:ILE:HD12	1.97	0.46
1:C:550:VAL:HG23	1:C:611:LYS:HD3	1.98	0.46
1:A:459:ALA:HB3	1:B:429:ARG:HH12	1.76	0.46
1:C:744:LEU:HB3	1:C:747:GLU:HG3	1.99	0.45
1:A:609:CYS:HB3	1:A:690:ILE:HG23	1.99	0.45
1:B:570:MET:HE2	1:B:812:PRO:HA	1.98	0.45

Continued on next page...

Continued from previous page...

Atom-1	Atom-2	Interatomic distance (Å)	Clash overlap (Å)
1:B:656:ALA:HB3	1:B:657:PRO:CD	2.46	0.45
1:C:620:MET:HG3	1:C:677:THR:HG21	1.98	0.45
1:C:506:MET:CE	1:C:559:ILE:HD12	2.46	0.45
1:C:610:ILE:HA	1:C:690:ILE:CD1	2.46	0.45
1:B:516:PHE:CZ	1:B:520:ILE:HD11	2.52	0.45
1:B:662:VAL:HG12	1:B:666:ARG:HG3	1.99	0.45
1:C:556:LEU:HD12	1:C:556:LEU:C	2.36	0.45
1:B:570:MET:CE	1:B:815:LEU:HD11	2.39	0.45
1:B:468:ARG:HG2	1:B:804:HIS:NE2	2.32	0.45
1:A:670:VAL:HG12	1:A:671:PHE:H	1.82	0.45
1:A:701:VAL:HB	1:A:702:ILE:HD12	1.99	0.45
1:A:549:ILE:CD1	1:A:610:ILE:HG21	2.47	0.45
1:A:634:CYS:HA	1:A:635:PRO:HD2	1.81	0.45
1:C:457:ILE:O	1:C:457:ILE:CG2	2.65	0.44
1:D:524:ASP:OD2	1:D:534:VAL:HB	2.17	0.44
1:D:530:PHE:CD1	1:D:530:PHE:N	2.84	0.44
1:D:768:GLN:HA	1:D:768:GLN:NE2	2.32	0.44
1:B:448:LEU:N	1:B:448:LEU:HD23	2.33	0.44
1:B:511:MET:SD	1:B:520:ILE:HD13	2.56	0.44
1:A:430:THR:HG23	1:A:432:GLU:H	1.83	0.44
1:D:561:ILE:HG12	1:D:589:TYR:CD2	2.52	0.44
1:C:656:ALA:HB3	1:C:657:PRO:HD3	2.00	0.44
1:C:743:VAL:HG12	1:C:745:PHE:HB2	2.00	0.44
1:B:621:ALA:HB1	1:B:673:LYS:O	2.18	0.44
1:D:803:LEU:HD22	1:D:808:ILE:HG21	1.99	0.44
1:A:426:ALA:CB	1:A:434:VAL:HG13	2.48	0.43
1:A:758:VAL:O	1:A:758:VAL:HG12	2.18	0.43
1:A:749:LEU:HD21	1:A:775:LEU:HD11	2.00	0.43
1:B:457:ILE:HD12	1:B:457:ILE:H	1.82	0.43
1:C:675:VAL:O	1:C:676:ARG:C	2.55	0.43
1:C:811:ASN:HA	1:C:812:PRO:HD3	1.92	0.43
1:A:527:VAL:O	1:A:527:VAL:CG1	2.60	0.43
1:C:450:PHE:CE1	1:C:454:LEU:CD1	3.01	0.43
1:C:606:ARG:HA	1:C:694:LEU:CD1	2.48	0.43
1:A:514:ASP:O	1:A:517:ARG:HG3	2.18	0.43
1:B:516:PHE:CE1	1:B:520:ILE:CD1	3.02	0.43
1:A:493:TRP:CE3	1:A:752:VAL:HG22	2.54	0.42
1:B:609:CYS:HB3	1:B:690:ILE:HG23	2.01	0.42
1:A:524:ASP:OD1	1:A:534:VAL:N	2.52	0.42
1:B:430:THR:O	1:B:433:ALA:HB3	2.19	0.42
1:C:691:ALA:HB3	1:C:692:PRO:CD	2.48	0.42

Continued on next page...

Continued from previous page...

Atom-1	Atom-2	Interatomic distance (Å)	Clash overlap (Å)
1:D:493:TRP:CE3	1:D:752:VAL:HG22	2.54	0.42
1:D:756:ALA:HB3	1:D:779:CYS:SG	2.59	0.42
1:C:495:ILE:HG13	1:C:771:LEU:HD21	2.00	0.42
1:C:501:THR:CG2	1:C:764:HIS:O	2.67	0.42
1:A:499:MET:O	1:A:766:LEU:HD22	2.20	0.42
1:B:516:PHE:CE1	1:B:520:ILE:HD11	2.54	0.42
1:B:560:GLN:O	1:B:564:ILE:CD1	2.59	0.42
1:A:492:LEU:N	1:A:575:ASP:OD2	2.41	0.42
1:C:520:ILE:HD13	1:C:538:LEU:HD12	2.00	0.42
1:C:494:PHE:CZ	1:C:567:LEU:HD23	2.55	0.42
1:A:430:THR:HG23	1:A:432:GLU:N	2.34	0.42
1:C:816:PHE:HB3	1:C:817:PRO:CD	2.50	0.42
1:D:619:ALA:CB	1:D:658:VAL:HG11	2.49	0.41
1:D:579:GLY:HA3	1:D:587:CYS:SG	2.61	0.41
1:B:744:LEU:HB3	1:B:747:GLU:CG	2.51	0.41
1:B:760:GLU:OE1	1:B:765:ALA:HB1	2.20	0.41
1:B:506:MET:CE	1:B:559:ILE:HD12	2.39	0.41
1:C:772:LYS:HG3	1:C:781:ILE:HD12	2.02	0.41
1:D:588:GLY:HA2	1:D:712:TRP:CZ3	2.56	0.41
1:B:493:TRP:CZ3	1:B:752:VAL:HG22	2.56	0.41
1:B:510:LEU:CD2	1:B:793:LEU:HA	2.51	0.41
1:C:610:ILE:HG12	1:C:690:ILE:HD12	2.03	0.41
1:B:454:LEU:HA	1:B:457:ILE:HD13	2.02	0.41
1:D:658:VAL:O	1:D:662:VAL:HG23	2.20	0.41
1:A:655:GLN:O	1:A:656:ALA:C	2.59	0.41
1:A:763:PRO:HA	1:A:785:MET:SD	2.61	0.41
1:B:434:VAL:O	1:B:437:LEU:N	2.53	0.41
1:C:511:MET:SD	1:C:520:ILE:HD12	2.60	0.41
1:A:442:LEU:O	1:A:445:SER:OG	2.33	0.41
1:A:765:ALA:HB1	1:A:768:GLN:CG	2.48	0.41
1:B:698:LEU:HB2	1:B:732:ALA:HB1	2.03	0.41
1:C:609:CYS:HB3	1:C:690:ILE:CG2	2.50	0.41
1:A:726:LEU:HD21	1:A:733:GLU:C	2.41	0.40
1:B:739:LEU:HD12	1:B:739:LEU:C	2.41	0.40
1:D:445:SER:O	1:D:451:LEU:HD11	2.21	0.40
1:B:606:ARG:O	1:B:610:ILE:HD12	2.19	0.40
1:D:557:THR:HG21	1:D:585:VAL:HG11	2.02	0.40
1:D:707:PRO:HA	1:D:729:THR:HG22	2.03	0.40
1:B:570:MET:HE3	1:B:815:LEU:CD1	2.43	0.40
1:C:549:ILE:HD12	1:C:610:ILE:HG21	2.03	0.40
1:A:564:ILE:HD11	1:A:761:ILE:HG21	2.03	0.40

Continued on next page...

Continued from previous page...

Atom-1	Atom-2	Interatomic distance (Å)	Clash overlap (Å)
1:A:570:MET:HE2	1:A:815:LEU:CD2	2.45	0.40
1:B:422:ARG:CZ	1:B:448:LEU:HD13	2.51	0.40
1:B:680:MET:HG2	1:B:682:PHE:CE2	2.57	0.40
1:B:690:ILE:O	1:B:690:ILE:CG2	2.68	0.40
1:B:719:GLU:HA	1:B:722:TRP:CG	2.57	0.40
1:D:438:LEU:O	1:D:439:GLU:C	2.59	0.40

There are no symmetry-related clashes.

5.3 Torsion angles (i)

5.3.1 Protein backbone (i)

In the following table, the Percentiles column shows the percent Ramachandran outliers of the chain as a percentile score with respect to all X-ray entries followed by that with respect to entries of similar resolution.

The Analysed column shows the number of residues for which the backbone conformation was analysed, and the total number of residues.

Mol	Chain	Analysed	Favoured	Allowed	Outliers	Percentiles	
1	A	402/425 (95%)	379 (94%)	20 (5%)	3 (1%)	22	51
1	B	394/425 (93%)	370 (94%)	24 (6%)	0	100	100
1	C	402/425 (95%)	374 (93%)	27 (7%)	1 (0%)	47	76
1	D	395/425 (93%)	376 (95%)	16 (4%)	3 (1%)	19	47
All	All	1593/1700 (94%)	1499 (94%)	87 (6%)	7 (0%)	34	64

All (7) Ramachandran outliers are listed below:

Mol	Chain	Res	Type
1	A	499	MET
1	D	499	MET
1	C	676	ARG
1	A	498	GLY
1	D	498	GLY
1	A	821	PHE
1	D	658	VAL

5.3.2 Protein sidechains (i)

In the following table, the Percentiles column shows the percent sidechain outliers of the chain as a percentile score with respect to all X-ray entries followed by that with respect to entries of similar resolution.

The Analysed column shows the number of residues for which the sidechain conformation was analysed, and the total number of residues.

Mol	Chain	Analysed	Rotameric	Outliers	Percentiles	
1	A	290/352 (82%)	271 (93%)	19 (7%)	16	42
1	B	272/352 (77%)	257 (94%)	15 (6%)	21	50
1	C	282/352 (80%)	262 (93%)	20 (7%)	14	38
1	D	237/352 (67%)	218 (92%)	19 (8%)	12	32
All	All	1081/1408 (77%)	1008 (93%)	73 (7%)	16	40

All (73) residues with a non-rotameric sidechain are listed below:

Mol	Chain	Res	Type
1	A	430	THR
1	A	437	LEU
1	A	443	ARG
1	A	445	SER
1	A	483	GLN
1	A	489	GLU
1	A	499	MET
1	A	501	THR
1	A	509	SER
1	A	517	ARG
1	A	593	CYS
1	A	630	CYS
1	A	633	ARG
1	A	634	CYS
1	A	677	THR
1	A	726	LEU
1	A	729	THR
1	A	773	ARG
1	A	776	LYS
1	B	420	SER
1	B	427	SER
1	B	440	GLN
1	B	463	THR
1	B	501	THR

Continued on next page...

Continued from previous page...

Mol	Chain	Res	Type
1	B	509	SER
1	B	530	PHE
1	B	552	SER
1	B	569	CYS
1	B	639	VAL
1	B	647	ASP
1	B	729	THR
1	B	731	SER
1	B	747	GLU
1	B	780	THR
1	C	430	THR
1	C	437	LEU
1	C	483	GLN
1	C	497	SER
1	C	501	THR
1	C	520	ILE
1	C	549	ILE
1	C	566	LEU
1	C	568	SER
1	C	569	CYS
1	C	573	ARG
1	C	582	LEU
1	C	630	CYS
1	C	645	SER
1	C	648	THR
1	C	670	VAL
1	C	677	THR
1	C	740	VAL
1	C	771	LEU
1	C	776	LYS
1	D	419	GLN
1	D	420	SER
1	D	424	LEU
1	D	443	ARG
1	D	452	SER
1	D	453	MET
1	D	476	GLU
1	D	518	ASP
1	D	522	ARG
1	D	530	PHE
1	D	540	SER
1	D	547	ASP

Continued on next page...

Continued from previous page...

Mol	Chain	Res	Type
1	D	569	CYS
1	D	585	VAL
1	D	655	GLN
1	D	683	HIS
1	D	738	ASN
1	D	806	SER
1	D	809	ASP

Sometimes sidechains can be flipped to improve hydrogen bonding and reduce clashes. All (1) such sidechains are listed below:

Mol	Chain	Res	Type
1	B	440	GLN

5.3.3 RNA (i)

There are no RNA molecules in this entry.

5.4 Non-standard residues in protein, DNA, RNA chains (i)

There are no non-standard protein/DNA/RNA residues in this entry.

5.5 Carbohydrates (i)

There are no monosaccharides in this entry.

5.6 Ligand geometry (i)

There are no ligands in this entry.

5.7 Other polymers (i)

There are no such residues in this entry.

5.8 Polymer linkage issues (i)

There are no chain breaks in this entry.

6 Fit of model and data (i)

6.1 Protein, DNA and RNA chains (i)

In the following table, the column labelled '#RSRZ> 2' contains the number (and percentage) of RSRZ outliers, followed by percent RSRZ outliers for the chain as percentile scores relative to all X-ray entries and entries of similar resolution. The OWAB column contains the minimum, median, 95th percentile and maximum values of the occupancy-weighted average B-factor per residue. The column labelled 'Q< 0.9' lists the number of (and percentage) of residues with an average occupancy less than 0.9.

Mol	Chain	Analysed	<RSRZ>	#RSRZ>2			OWAB(Å^2)	Q<0.9
1	A	404/425 (95%)	-0.05	5 (1%)	79	73	23, 42, 61, 79	0
1	B	400/425 (94%)	0.09	25 (6%)	20	12	22, 42, 57, 72	0
1	C	403/425 (94%)	-0.22	3 (0%)	87	84	23, 42, 59, 82	0
1	D	399/425 (93%)	0.21	28 (7%)	16	9	22, 42, 60, 70	0
All	All	1606/1700 (94%)	0.01	61 (3%)	40	30	22, 42, 60, 82	0

All (61) RSRZ outliers are listed below:

Mol	Chain	Res	Type	RSRZ
1	D	638	VAL	6.6
1	B	646	LYS	4.5
1	B	670	VAL	4.4
1	B	638	VAL	4.4
1	D	679	GLY	4.1
1	D	722	TRP	4.0
1	D	634	CYS	4.0
1	D	624	GLY	4.0
1	B	630	CYS	3.9
1	D	640	PRO	3.8
1	A	821	PHE	3.8
1	D	622	ALA	3.7
1	B	662	VAL	3.7
1	B	617	PRO	3.5
1	D	677	THR	3.5
1	D	636	PRO	3.4
1	D	656	ALA	3.2
1	D	657	PRO	3.2
1	D	687	MET	3.1
1	D	618	GLY	3.0
1	D	617	PRO	3.0

Continued on next page...

Continued from previous page...

Mol	Chain	Res	Type	RSRZ
1	D	745	PHE	2.9
1	D	637	GLY	2.9
1	D	630	CYS	2.8
1	B	637	GLY	2.8
1	B	615	LEU	2.8
1	B	635	PRO	2.7
1	B	605	TRP	2.7
1	C	637	GLY	2.6
1	B	501	THR	2.6
1	D	655	GLN	2.5
1	B	636	PRO	2.5
1	D	714	SER	2.5
1	B	530	PHE	2.5
1	D	654	PRO	2.4
1	B	640	PRO	2.4
1	D	692	PRO	2.4
1	B	671	PHE	2.4
1	B	613	ALA	2.3
1	B	665	LEU	2.3
1	A	613	ALA	2.3
1	B	442	LEU	2.3
1	D	641	ALA	2.3
1	D	678	GLY	2.3
1	A	496	CYS	2.2
1	D	610	ILE	2.2
1	D	748	ALA	2.2
1	D	753	PRO	2.2
1	B	619	ALA	2.2
1	D	752	VAL	2.2
1	C	619	ALA	2.1
1	D	751	HIS	2.1
1	B	658	VAL	2.1
1	A	500	GLY	2.1
1	B	656	ALA	2.1
1	B	752	VAL	2.1
1	B	659	PHE	2.1
1	C	662	VAL	2.1
1	B	622	ALA	2.0
1	B	641	ALA	2.0
1	A	498	GLY	2.0

6.2 Non-standard residues in protein, DNA, RNA chains (i)

There are no non-standard protein/DNA/RNA residues in this entry.

6.3 Carbohydrates (i)

There are no monosaccharides in this entry.

6.4 Ligands (i)

There are no ligands in this entry.

6.5 Other polymers (i)

There are no such residues in this entry.