Full wwPDB X-ray Structure Validation Report (i)

Feb 18, 2024 – 10:16 PM EST

PDB ID	:	4IJA
Title	:	Structure of S. aureus methicillin resistance factor MecR2
Authors	:	Arede, P.; Botelho, T.; Guevara, T.; Uson, I.; Oliveira, D.C.; Gomis-Ruth, F.X.
Deposited on	:	2012-12-21
Resolution	:	2.10 Å(reported)

This is a Full wwPDB X-ray Structure Validation Report for a publicly released PDB entry.

We welcome your comments at *validation@mail.wwpdb.org*
A user guide is available at
https://www.wwpdb.org/validation/2017/XrayValidationReportHelp
with specific help available everywhere you see the (i) symbol.

The types of validation reports are described at
http://www.wwpdb.org/validation/2017/FAQs#types.

The following versions of software and data (see references (i)) were used in the production of this report:

MolProbity	:	4.02b-467
Mogul	:	1.8.5 (274361), CSD as541be (2020)
Xtriage (Phenix)	:	1.13
EDS	:	2.36
Percentile statistics	:	20191225.v01 (using entries in the PDB archive December 25th 2019)
Refmac	:	5.8.0158
CCP4	:	7.0.044 (Gargrove)
Ideal geometry (proteins)	:	Engh & Huber (2001)
Ideal geometry (DNA, RNA)	:	Parkinson et al. (1996)
Validation Pipeline (wwPDB-VP)	:	2.36

1 Overall quality at a glance (i)

The following experimental techniques were used to determine the structure:
X-RAY DIFFRACTION

The reported resolution of this entry is 2.10 Å.

Percentile scores (ranging between 0-100) for global validation metrics of the entry are shown in the following graphic. The table shows the number of entries on which the scores are based.

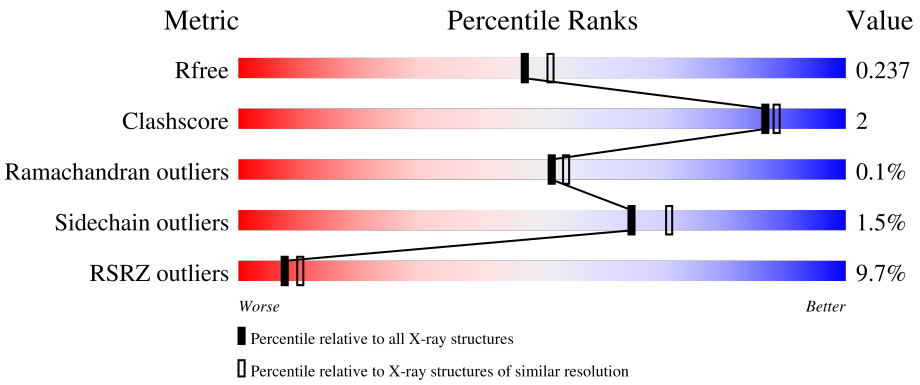

Metric	Whole archive (#Entries)	Similar resolution (#Entries, resolution range(Å))
R_{free}	130704	5197 (2.10-2.10)
Clashscore	141614	5710 (2.10-2.10)
Ramachandran outliers	138981	5647 (2.10-2.10)
Sidechain outliers	138945	5648 (2.10-2.10)
RSRZ outliers	127900	5083 (2.10-2.10)

The table below summarises the geometric issues observed across the polymeric chains and their fit to the electron density. The red, orange, yellow and green segments of the lower bar indicate the fraction of residues that contain outliers for >=3, 2, 1 and 0 types of geometric quality criteria respectively. A grey segment represents the fraction of residues that are not modelled. The numeric value for each fraction is indicated below the corresponding segment, with a dot representing fractions <=5% The upper red bar (where present) indicates the fraction of residues that have poor fit to the electron density. The numeric value is given above the bar.

Mol	Chain	Length	Quality of chain
1	A	397	4% 86% 6% 9%
1	B	397	14% 84% 7% 9%

2 Entry composition (i)

There are 5 unique types of molecules in this entry. The entry contains 6136 atoms, of which 0 are hydrogens and 0 are deuteriums.

In the tables below, the ZeroOcc column contains the number of atoms modelled with zero occupancy, the AltConf column contains the number of residues with at least one atom in alternate conformation and the Trace column contains the number of residues modelled with at most 2 atoms.

- Molecule 1 is a protein called XylR protein.

Mol	Chain	Residues	Atoms					ZeroOcc	AltConf	Trace
			Total	C	N	O	S			
1	A	363	2907	1857	493	551	6	0	0	0
1	B	361	2906	1860	488	553	5	0	0	0

There are 42 discrepancies between the modelled and reference sequences:

Chain	Residue	Modelled	Actual	Comment	Reference
A	-21	MET	-	expression tag	UNP Q99XE2
A	-20	GLY	-	expression tag	UNP Q99XE2
A	-19	SER	-	expression tag	UNP Q99XE2
A	-18	SER	-	expression tag	UNP Q99XE2
A	-17	HIS	-	expression tag	UNP Q99XE2
A	-16	HIS	-	expression tag	UNP Q99XE2
A	-15	HIS	-	expression tag	UNP Q99XE2
A	-14	HIS	-	expression tag	UNP Q99XE2
A	-13	HIS	-	expression tag	UNP Q99XE2
A	-12	HIS	-	expression tag	UNP Q99XE2
A	-11	SER	-	expression tag	UNP Q99XE2
A	-10	SER	-	expression tag	UNP Q99XE2
A	-9	GLY	-	expression tag	UNP Q99XE2
A	-8	GLU	-	expression tag	UNP Q99XE2
A	-7	ASN	-	expression tag	UNP Q99XE2
A	-6	LEU	-	expression tag	UNP Q99XE2
A	-5	TYR	-	expression tag	UNP Q99XE2
A	-4	PHE	-	expression tag	UNP Q99XE2
A	-3	GLN	-	expression tag	UNP Q99XE2
A	-2	GLY	-	expression tag	UNP Q99XE2
A	-1	PRO	-	expression tag	UNP Q99XE2
B	-21	MET	-	expression tag	UNP Q99XE2
B	-20	GLY	-	expression tag	UNP Q99XE2
B	-19	SER	-	expression tag	UNP Q99XE2
B	-18	SER	-	expression tag	UNP Q99XE2

Continued on next page...

Continued from previous page...

Chain	Residue	Modelled	Actual	Comment	Reference
B	-17	HIS	-	expression tag	UNP Q99XE2
B	-16	HIS	-	expression tag	UNP Q99XE2
B	-15	HIS	-	expression tag	UNP Q99XE2
B	-14	HIS	-	expression tag	UNP Q99XE2
B	-13	HIS	-	expression tag	UNP Q99XE2
B	-12	HIS	-	expression tag	UNP Q99XE2
B	-11	SER	-	expression tag	UNP Q99XE2
B	-10	SER	-	expression tag	UNP Q99XE2
B	-9	GLY	-	expression tag	UNP Q99XE2
B	-8	GLU	-	expression tag	UNP Q99XE2
B	-7	ASN	-	expression tag	UNP Q99XE2
B	-6	LEU	-	expression tag	UNP Q99XE2
B	-5	TYR	-	expression tag	UNP Q99XE2
B	-4	PHE	-	expression tag	UNP Q99XE2
B	-3	GLN	-	expression tag	UNP Q99XE2
B	-2	GLY	-	expression tag	UNP Q99XE2
B	-1	PRO	-	expression tag	UNP Q99XE2

- Molecule 2 is PHOSPHATE ION (three-letter code: PO4) (formula: O_4P).

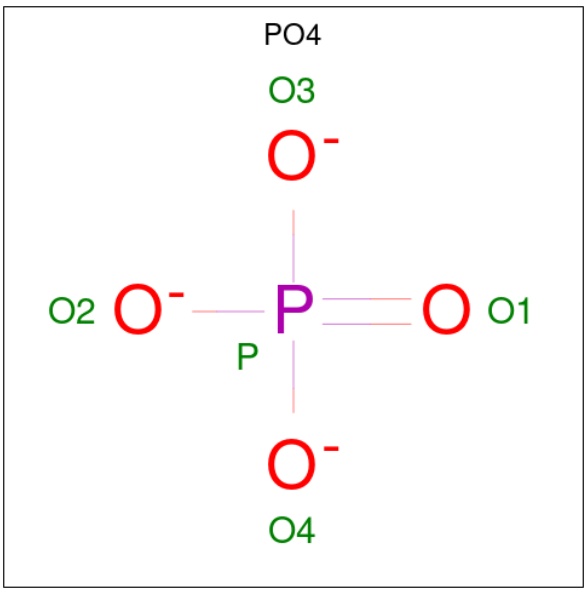

Mol	Chain	Residues	Atoms			ZeroOcc	AltConf
			Total	O	P		
2	A	1	5	4	1	0	0

- Molecule 3 is GLYCEROL (three-letter code: GOL) (formula: $C_3H_8O_3$).

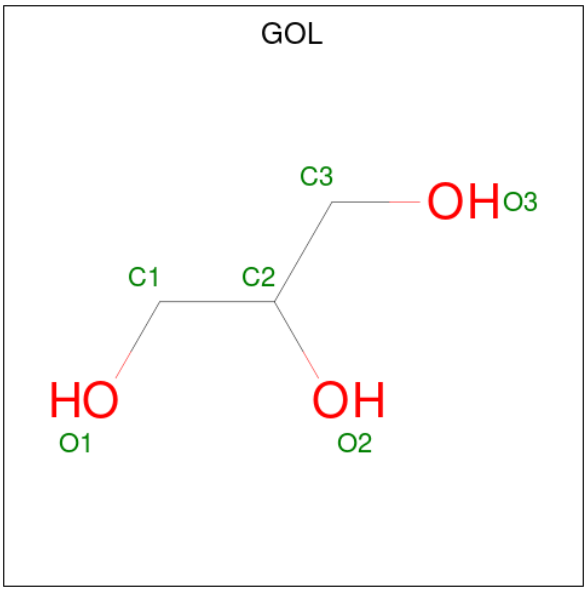

Mol	Chain	Residues	Atoms			ZeroOcc	AltConf
			Total	C	O		
3	A	1	6	3	3	0	0
			Total	C	O		
3	A	1	6	3	3	0	0
			Total	C	O		
3	A	1	6	3	3	0	0
			Total	C	O		
3	A	1	6	3	3	0	0
			Total	C	O		
3	A	1	6	3	3	0	0
			Total	C	O		
3	B	1	6	3	3	0	0

- Molecule 4 is POTASSIUM ION (three-letter code: K) (formula: K).

Mol	Chain	Residues	Atoms		ZeroOcc	AltConf
			Total	K		
4	A	2	2	2	0	0
			Total	K		
4	B	2	2	2	0	0

- Molecule 5 is water.

Mol	Chain	Residues	Atoms		ZeroOcc	AltConf
			Total	O		
5	A	193	193	193	0	0

Continued on next page...

Continued from previous page...

Mol	Chain	Residues	Atoms		ZeroOcc	AltConf
			Total	O		
5	B	85	85	85	0	0

3 Residue-property plots (i)

These plots are drawn for all protein, RNA, DNA and oligosaccharide chains in the entry. The first graphic for a chain summarises the proportions of the various outlier classes displayed in the second graphic. The second graphic shows the sequence view annotated by issues in geometry and electron density. Residues are color-coded according to the number of geometric quality criteria for which they contain at least one outlier: green = 0, yellow = 1, orange = 2 and red = 3 or more. A red dot above a residue indicates a poor fit to the electron density (RSRZ > 2). Stretches of 2 or more consecutive residues without any outlier are shown as a green connector. Residues present in the sample, but not in the model, are shown in grey.

• Molecule 1: XylR protein

Chain A:

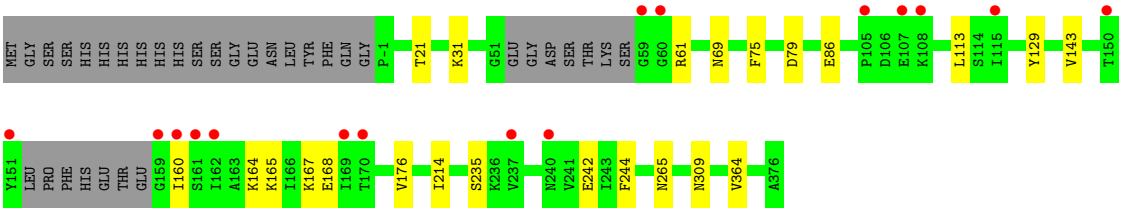

• Molecule 1: XylR protein

Chain B:

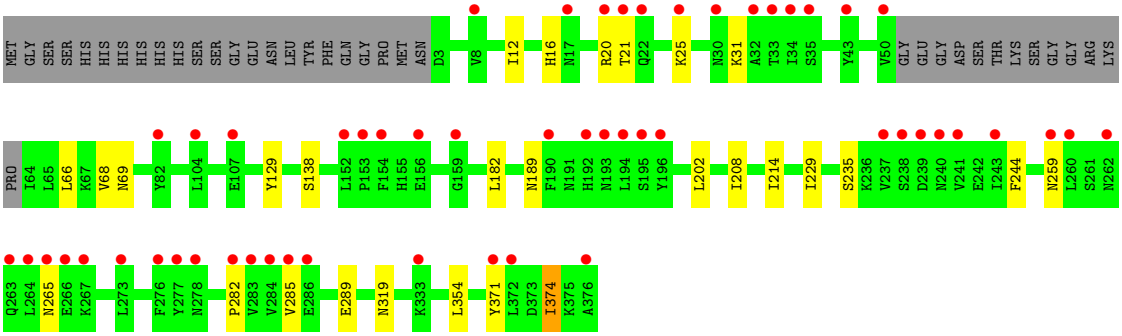

4 Data and refinement statistics (i)

Property	Value	Source
Space group	P 21 21 21	Depositor
Cell constants a, b, c, α, β, γ	66.47Å 73.22Å 157.38Å 90.00° 90.00° 90.00°	Depositor
Resolution (Å)	49.22 – 2.10 49.22 – 2.10	Depositor EDS
% Data completeness (in resolution range)	(Not available) (49.22-2.10) 99.5 (49.22-2.10)	Depositor EDS
R_{merge}	0.09	Depositor
R_{sym}	(Not available)	Depositor
$< I/\sigma(I) >$ [1]	2.51 (at 2.10Å)	Xtriage
Refinement program	BUSTER 2.8.0	Depositor
R, R_{free}	0.190 , 0.229 0.190 , 0.237	Depositor DCC
R_{free} test set	762 reflections (1.68%)	wwPDB-VP
Wilson B-factor (Å^2)	32.6	Xtriage
Anisotropy	0.605	Xtriage
Bulk solvent k_{sol}(e/Å^3), B_{sol}(Å^2)	0.36 , 56.6	EDS
L-test for twinning[2]	$< \|L\| > = 0.49$, $< L^2 > = 0.33$	Xtriage
Estimated twinning fraction	No twinning to report.	Xtriage
F_o,F_c correlation	0.96	EDS
Total number of atoms	6136	wwPDB-VP
Average B, all atoms (Å^2)	49.0	wwPDB-VP

Xtriage's analysis on translational NCS is as follows: *The largest off-origin peak in the Patterson function is 4.72% of the height of the origin peak. No significant pseudotranslation is detected.*

[1]Intensities estimated from amplitudes.

[2]Theoretical values of $< |L| >$, $< L^2 >$ for acentric reflections are 0.5, 0.333 respectively for untwinned datasets, and 0.375, 0.2 for perfectly twinned datasets.

5 Model quality (i)

5.1 Standard geometry (i)

Bond lengths and bond angles in the following residue types are not validated in this section: PO4, K, GOL

The Z score for a bond length (or angle) is the number of standard deviations the observed value is removed from the expected value. A bond length (or angle) with $|Z| > 5$ is considered an outlier worth inspection. RMSZ is the root-mean-square of all Z scores of the bond lengths (or angles).

Mol	Chain	Bond lengths		Bond angles	
		RMSZ	$\#\|Z\|>5$	RMSZ	$\#\|Z\|>5$
1	A	0.51	0/2952	0.59	0/3986
1	B	0.48	0/2953	0.61	0/3993
All	All	0.49	0/5905	0.60	0/7979

There are no bond length outliers.

There are no bond angle outliers.

There are no chirality outliers.

There are no planarity outliers.

5.2 Too-close contacts (i)

In the following table, the Non-H and H(model) columns list the number of non-hydrogen atoms and hydrogen atoms in the chain respectively. The H(added) column lists the number of hydrogen atoms added and optimized by MolProbity. The Clashes column lists the number of clashes within the asymmetric unit, whereas Symm-Clashes lists symmetry-related clashes.

Mol	Chain	Non-H	H(model)	H(added)	Clashes	Symm-Clashes
1	A	2907	0	2965	12	0
1	B	2906	0	2952	14	0
2	A	5	0	0	0	0
3	A	30	0	40	1	0
3	B	6	0	8	0	0
4	A	2	0	0	0	0
4	B	2	0	0	0	0
5	A	193	0	0	0	0
5	B	85	0	0	1	0
All	All	6136	0	5965	25	0

The all-atom clashscore is defined as the number of clashes found per 1000 atoms (including

hydrogen atoms). The all-atom clashscore for this structure is 2.

All (25) close contacts within the same asymmetric unit are listed below, sorted by their clash magnitude.

Atom-1	Atom-2	Interatomic distance (Å)	Clash overlap (Å)
1:A:69:ASN:HD21	1:A:129:TYR:HE2	1.46	0.62
1:B:69:ASN:HD21	1:B:129:TYR:HE2	1.46	0.62
1:A:160:ILE:HB	1:A:165:LYS:HE3	1.84	0.59
1:A:214:ILE:HD13	1:B:214:ILE:HD13	1.85	0.58
1:B:282:PRO:HA	1:B:285:VAL:HG12	1.92	0.51
1:B:202:LEU:CD1	1:B:229:ILE:HD11	2.41	0.51
1:B:21:THR:HG23	1:B:31:LYS:HE2	1.93	0.49
1:B:319:ASN:ND2	5:B:548:HOH:O	2.45	0.49
1:A:21:THR:HG23	1:A:31:LYS:HE2	1.94	0.49
1:B:138:SER:HB2	1:B:182:LEU:HD12	1.96	0.47
1:B:354:LEU:HD22	1:B:374:ILE:HD11	1.95	0.47
1:A:69:ASN:ND2	1:A:129:TYR:HE2	2.13	0.46
1:B:69:ASN:ND2	1:B:129:TYR:HE2	2.13	0.46
1:B:189:ASN:ND2	1:B:371:TYR:HA	2.32	0.44
1:B:12:ILE:HG22	1:B:68:VAL:HG23	1.99	0.43
1:A:235:SER:HB2	1:A:242:GLU:HG3	2.00	0.43
1:A:143:VAL:HG11	1:A:176:VAL:HG13	1.98	0.43
1:A:75:PHE:HE2	1:A:364:VAL:HG21	1.85	0.42
1:B:20:ARG:HG2	1:B:66:LEU:HD11	2.02	0.41
1:B:235:SER:HB3	1:B:244:PHE:CE2	2.56	0.41
1:A:309:ASN:HA	3:A:504:GOL:H32	2.02	0.41
1:B:208:ILE:HG22	1:B:229:ILE:HG13	2.03	0.41
1:A:235:SER:HB3	1:A:244:PHE:CE2	2.56	0.41
1:A:79:ASP:HB3	1:A:86:GLU:HB2	2.03	0.41
1:A:113:LEU:HD11	1:A:165:LYS:HD3	2.03	0.40

There are no symmetry-related clashes.

5.3 Torsion angles (i)

5.3.1 Protein backbone (i)

In the following table, the Percentiles column shows the percent Ramachandran outliers of the chain as a percentile score with respect to all X-ray entries followed by that with respect to entries of similar resolution.

The Analysed column shows the number of residues for which the backbone conformation was analysed, and the total number of residues.

Mol	Chain	Analysed	Favoured	Allowed	Outliers	Percentiles	
1	A	357/397 (90%)	356 (100%)	1 (0%)	0	100	100
1	B	357/397 (90%)	351 (98%)	5 (1%)	1 (0%)	41	41
All	All	714/794 (90%)	707 (99%)	6 (1%)	1 (0%)	51	54

All (1) Ramachandran outliers are listed below:

Mol	Chain	Res	Type
1	B	16	HIS

5.3.2 Protein sidechains (i)

In the following table, the Percentiles column shows the percent sidechain outliers of the chain as a percentile score with respect to all X-ray entries followed by that with respect to entries of similar resolution.

The Analysed column shows the number of residues for which the sidechain conformation was analysed, and the total number of residues.

Mol	Chain	Analysed	Rotameric	Outliers	Percentiles	
1	A	330/360 (92%)	325 (98%)	5 (2%)	65	71
1	B	331/360 (92%)	326 (98%)	5 (2%)	65	71
All	All	661/720 (92%)	651 (98%)	10 (2%)	65	71

All (10) residues with a non-rotameric sidechain are listed below:

Mol	Chain	Res	Type
1	A	61	ARG
1	A	164	LYS
1	A	167	LYS
1	A	168	GLU
1	A	265	ASN
1	B	25	LYS
1	B	259	ASN
1	B	265	ASN
1	B	289	GLU
1	B	374	ILE

Sometimes sidechains can be flipped to improve hydrogen bonding and reduce clashes. All (7) such sidechains are listed below:

Mol	Chain	Res	Type
1	A	48	ASN
1	B	17	ASN
1	B	140	HIS
1	B	155	HIS
1	B	300	HIS
1	B	314	ASN
1	B	319	ASN

5.3.3 RNA (i)

There are no RNA molecules in this entry.

5.4 Non-standard residues in protein, DNA, RNA chains (i)

There are no non-standard protein/DNA/RNA residues in this entry.

5.5 Carbohydrates (i)

There are no monosaccharides in this entry.

5.6 Ligand geometry (i)

Of 11 ligands modelled in this entry, 4 are monoatomic - leaving 7 for Mogul analysis.

In the following table, the Counts columns list the number of bonds (or angles) for which Mogul statistics could be retrieved, the number of bonds (or angles) that are observed in the model and the number of bonds (or angles) that are defined in the Chemical Component Dictionary. The Link column lists molecule types, if any, to which the group is linked. The Z score for a bond length (or angle) is the number of standard deviations the observed value is removed from the expected value. A bond length (or angle) with $|Z| > 2$ is considered an outlier worth inspection. RMSZ is the root-mean-square of all Z scores of the bond lengths (or angles).

Mol	Type	Chain	Res	Link	Bond lengths			Bond angles		
					Counts	RMSZ	$\#\|Z\| > 2$	Counts	RMSZ	$\#\|Z\| > 2$
2	PO4	A	501	-	4,4,4	2.31	1 (25%)	6,6,6	1.04	0
3	GOL	A	506	-	5,5,5	0.91	0	5,5,5	0.77	0
3	GOL	A	505	-	5,5,5	0.61	0	5,5,5	1.03	0
3	GOL	A	504	-	5,5,5	1.03	0	5,5,5	1.01	0
3	GOL	B	401	-	5,5,5	1.07	0	5,5,5	0.71	0
3	GOL	A	503	-	5,5,5	0.52	0	5,5,5	0.52	0
3	GOL	A	502	-	5,5,5	0.83	0	5,5,5	0.94	0

In the following table, the Chirals column lists the number of chiral outliers, the number of chiral centers analysed, the number of these observed in the model and the number defined in the Chemical Component Dictionary. Similar counts are reported in the Torsion and Rings columns. '-' means no outliers of that kind were identified.

Mol	Type	Chain	Res	Link	Chirals	Torsions	Rings
3	GOL	A	505	-	-	2/4/4/4	-
3	GOL	A	504	-	-	2/4/4/4	-
3	GOL	A	502	-	-	2/4/4/4	-
3	GOL	B	401	-	-	3/4/4/4	-
3	GOL	A	503	-	-	2/4/4/4	-
3	GOL	A	506	-	-	2/4/4/4	-

All (1) bond length outliers are listed below:

Mol	Chain	Res	Type	Atoms	Z	Observed(Å)	Ideal(Å)
2	A	501	PO4	P-O1	3.61	1.59	1.50

There are no bond angle outliers.

There are no chirality outliers.

All (13) torsion outliers are listed below:

Mol	Chain	Res	Type	Atoms
3	A	502	GOL	C1-C2-C3-O3
3	A	502	GOL	O2-C2-C3-O3
3	B	401	GOL	C1-C2-C3-O3
3	A	504	GOL	C1-C2-C3-O3
3	A	505	GOL	O1-C1-C2-C3
3	A	506	GOL	O1-C1-C2-C3
3	B	401	GOL	O1-C1-C2-C3
3	A	504	GOL	O2-C2-C3-O3
3	A	505	GOL	O1-C1-C2-O2
3	A	503	GOL	O1-C1-C2-O2
3	A	506	GOL	O1-C1-C2-O2
3	A	503	GOL	O1-C1-C2-C3
3	B	401	GOL	O2-C2-C3-O3

There are no ring outliers.

1 monomer is involved in 1 short contact:

Mol	Chain	Res	Type	Clashes	Symm-Clashes
3	A	504	GOL	1	0

5.7 Other polymers (i)

There are no such residues in this entry.

5.8 Polymer linkage issues (i)

There are no chain breaks in this entry.

6 Fit of model and data (i)

6.1 Protein, DNA and RNA chains (i)

In the following table, the column labelled '#RSRZ> 2' contains the number (and percentage) of RSRZ outliers, followed by percent RSRZ outliers for the chain as percentile scores relative to all X-ray entries and entries of similar resolution. The OWAB column contains the minimum, median, 95th percentile and maximum values of the occupancy-weighted average B-factor per residue. The column labelled 'Q< 0.9' lists the number of (and percentage) of residues with an average occupancy less than 0.9.

Mol	Chain	Analysed	<RSRZ>	#RSRZ>2	OWAB(Å^2)	Q<0.9
1	A	363/397 (91%)	0.19	16 (4%) 34 40	21, 36, 70, 102	0
1	B	361/397 (90%)	0.67	54 (14%) 2 3	26, 52, 99, 127	0
All	All	724/794 (91%)	0.43	70 (9%) 7 10	21, 42, 88, 127	0

All (70) RSRZ outliers are listed below:

Mol	Chain	Res	Type	RSRZ
1	B	196	TYR	7.4
1	B	239	ASP	6.6
1	A	151	TYR	6.3
1	A	169	ILE	5.3
1	A	160	ILE	5.2
1	B	259	ASN	5.2
1	B	195	SER	5.0
1	B	159	GLY	5.0
1	A	107	GLU	4.9
1	B	194	LEU	4.8
1	B	154	PHE	4.7
1	A	240	ASN	4.6
1	A	237	VAL	4.6
1	B	241	VAL	4.4
1	B	262	ASN	4.4
1	B	82	TYR	4.4
1	B	264	LEU	4.3
1	B	190	PHE	4.1
1	B	25	LYS	4.0
1	B	192	HIS	4.0
1	B	240	ASN	3.9
1	B	193	ASN	3.8
1	B	243	ILE	3.6
1	A	159	GLY	3.6

Continued on next page...

Continued from previous page...

Mol	Chain	Res	Type	RSRZ
1	B	285	VAL	3.5
1	B	282	PRO	3.5
1	B	278	ASN	3.4
1	B	276	PHE	3.4
1	B	50	VAL	3.4
1	B	20	ARG	3.4
1	B	43	TYR	3.4
1	B	266	GLU	3.3
1	B	267	LYS	3.2
1	B	33	THR	3.0
1	A	150	THR	3.0
1	B	238	SER	3.0
1	B	107	GLU	2.9
1	B	284	VAL	2.9
1	B	35	SER	2.9
1	A	115	ILE	2.8
1	A	59	GLY	2.8
1	B	371	TYR	2.8
1	A	105	PRO	2.7
1	B	153	PRO	2.7
1	A	108	LYS	2.7
1	B	265	ASN	2.7
1	B	283	VAL	2.6
1	B	156	GLU	2.6
1	A	161	SER	2.6
1	B	263	GLN	2.6
1	B	333	LYS	2.5
1	A	170	THR	2.5
1	A	60	GLY	2.5
1	B	372	LEU	2.4
1	B	21	THR	2.4
1	B	277	TYR	2.4
1	B	104	LEU	2.3
1	B	17	ASN	2.3
1	B	22	GLN	2.3
1	B	260	LEU	2.2
1	B	273	LEU	2.2
1	B	30	ASN	2.2
1	A	162	ILE	2.1
1	B	32	ALA	2.1
1	B	286	GLU	2.1
1	B	34	ILE	2.1

Continued on next page...

Continued from previous page...

Mol	Chain	Res	Type	RSRZ
1	B	152	LEU	2.1
1	B	8	VAL	2.0
1	B	376	ALA	2.0
1	B	237	VAL	2.0

6.2 Non-standard residues in protein, DNA, RNA chains (i)

There are no non-standard protein/DNA/RNA residues in this entry.

6.3 Carbohydrates (i)

There are no monosaccharides in this entry.

6.4 Ligands (i)

In the following table, the Atoms column lists the number of modelled atoms in the group and the number defined in the chemical component dictionary. The B-factors column lists the minimum, median, 95th percentile and maximum values of B factors of atoms in the group. The column labelled 'Q< 0.9' lists the number of atoms with occupancy less than 0.9.

Mol	Type	Chain	Res	Atoms	RSCC	RSR	B-factors(Å^2)	Q<0.9
3	GOL	A	506	6/6	0.67	0.22	68,69,70,70	0
3	GOL	A	504	6/6	0.83	0.20	56,57,57,58	0
3	GOL	A	505	6/6	0.89	0.24	50,52,52,55	0
4	K	A	508	1/1	0.89	0.12	71,71,71,71	0
3	GOL	B	401	6/6	0.90	0.14	42,44,46,49	0
2	PO4	A	501	5/5	0.90	0.15	85,88,90,91	0
4	K	B	402	1/1	0.90	0.08	73,73,73,73	0
3	GOL	A	502	6/6	0.91	0.20	48,51,51,51	0
4	K	A	507	1/1	0.93	0.11	45,45,45,45	0
3	GOL	A	503	6/6	0.96	0.12	40,44,44,45	0
4	K	B	403	1/1	0.99	0.11	38,38,38,38	0

6.5 Other polymers (i)

There are no such residues in this entry.