Full wwPDB X-ray Structure Validation Report (i)

Oct 31, 2023 – 08:31 PM JST

PDB ID	:	5H1K
Title	:	Crystal structure of WD40 repeat domains of Gemin5 in complex with 13-nt U4 snRNA fragment
Authors	:	Wang, Y.; Jin, W.; Liu, C.P.; Yang, N.; Jin, M.; Cong, Y.; Wang, M.; Xu, R.M.
Deposited on	:	2016-10-10
Resolution	:	1.90 Å(reported)

This is a Full wwPDB X-ray Structure Validation Report for a publicly released PDB entry.

We welcome your comments at *validation@mail.wwpdb.org*
A user guide is available at
https://www.wwpdb.org/validation/2017/XrayValidationReportHelp
with specific help available everywhere you see the (i) symbol.

The types of validation reports are described at
http://www.wwpdb.org/validation/2017/FAQs#types.

The following versions of software and data (see references (1)) were used in the production of this report:

MolProbity	:	4.02b-467
Xtriage (Phenix)	:	1.13
EDS	:	2.36
Percentile statistics	:	20191225.v01 (using entries in the PDB archive December 25th 2019)
Refmac	:	5.8.0158
CCP4	:	7.0.044 (Gargrove)
Ideal geometry (proteins)	:	Engh & Huber (2001)
Ideal geometry (DNA, RNA)	:	Parkinson et al. (1996)
Validation Pipeline (wwPDB-VP)	:	2.36

1 Overall quality at a glance (i)

The following experimental techniques were used to determine the structure:
X-RAY DIFFRACTION

The reported resolution of this entry is 1.90 Å.

Percentile scores (ranging between 0-100) for global validation metrics of the entry are shown in the following graphic. The table shows the number of entries on which the scores are based.

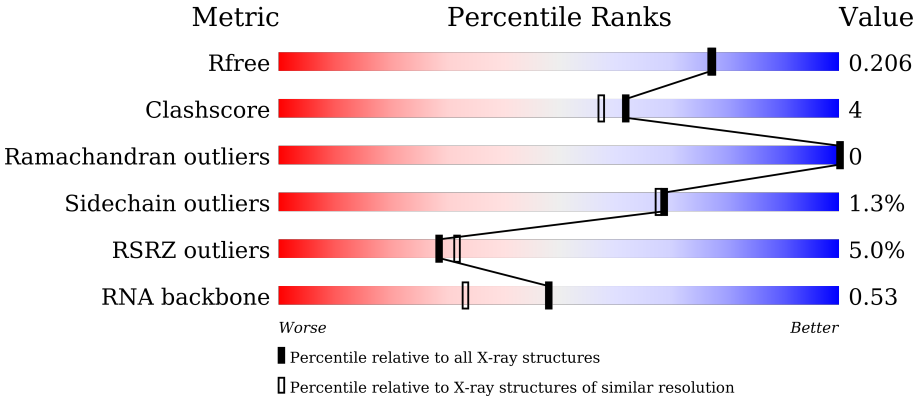

Metric	Whole archive (#Entries)	Similar resolution (#Entries, resolution range(Å))
R_{free}	130704	6207 (1.90-1.90)
Clashscore	141614	6847 (1.90-1.90)
Ramachandran outliers	138981	6760 (1.90-1.90)
Sidechain outliers	138945	6760 (1.90-1.90)
RSRZ outliers	127900	6082 (1.90-1.90)
RNA backbone	3102	1013 (2.42-1.38)

The table below summarises the geometric issues observed across the polymeric chains and their fit to the electron density. The red, orange, yellow and green segments of the lower bar indicate the fraction of residues that contain outliers for >=3, 2, 1 and 0 types of geometric quality criteria respectively. A grey segment represents the fraction of residues that are not modelled. The numeric value for each fraction is indicated below the corresponding segment, with a dot representing fractions <=5% The upper red bar (where present) indicates the fraction of residues that have poor fit to the electron density. The numeric value is given above the bar.

Mol	Chain	Length	Quality of chain
1	A	734	4% 82% 9% 8%
1	B	734	6% 86% 8% • 6%
2	C	13	85% 15%
2	D	13	8% 62% 15% 8% 8% 8%

2 Entry composition (i)

There are 3 unique types of molecules in this entry. The entry contains 12751 atoms, of which 0 are hydrogens and 0 are deuteriums.

In the tables below, the ZeroOcc column contains the number of atoms modelled with zero occupancy, the AltConf column contains the number of residues with at least one atom in alternate conformation and the Trace column contains the number of residues modelled with at most 2 atoms.

- Molecule 1 is a protein called Gem-associated protein 5.

Mol	Chain	Residues	Atoms					ZeroOcc	AltConf	Trace
			Total	C	N	O	S			
1	A	674	5397	3447	919	998	33	0	24	0
1	B	690	5502	3507	949	1011	35	0	21	0

There are 16 discrepancies between the modelled and reference sequences:

Chain	Residue	Modelled	Actual	Comment	Reference
A	-7	GLY	-	expression tag	UNP Q8TEQ6
A	-6	ALA	-	expression tag	UNP Q8TEQ6
A	-5	MET	-	expression tag	UNP Q8TEQ6
A	-4	GLY	-	expression tag	UNP Q8TEQ6
A	-3	ILE	-	expression tag	UNP Q8TEQ6
A	-2	ARG	-	expression tag	UNP Q8TEQ6
A	-1	ASN	-	expression tag	UNP Q8TEQ6
A	0	SER	-	expression tag	UNP Q8TEQ6
B	-7	GLY	-	expression tag	UNP Q8TEQ6
B	-6	ALA	-	expression tag	UNP Q8TEQ6
B	-5	MET	-	expression tag	UNP Q8TEQ6
B	-4	GLY	-	expression tag	UNP Q8TEQ6
B	-3	ILE	-	expression tag	UNP Q8TEQ6
B	-2	ARG	-	expression tag	UNP Q8TEQ6
B	-1	ASN	-	expression tag	UNP Q8TEQ6
B	0	SER	-	expression tag	UNP Q8TEQ6

- Molecule 2 is a RNA chain called U4 snRNA (5'-R(*GP*CP*AP*AP*UP*UP*UP*UP*UP *GP*AP*CP*A)-3').

Mol	Chain	Residues	Atoms					ZeroOcc	AltConf	Trace
			Total	C	N	O	P			
2	C	13	271	123	46	90	12	0	0	0

Continued on next page...

Continued from previous page...

Mol	Chain	Residues	Atoms					ZeroOcc	AltConf	Trace
			Total	C	N	O	P			
2	D	12	251	113	41	85	12	0	0	0

- Molecule 3 is water.

Mol	Chain	Residues	Atoms		ZeroOcc	AltConf
			Total	O		
3	A	643	643	643	0	0
3	B	536	536	536	0	0
3	C	84	84	84	0	0
3	D	67	67	67	0	0

3 Residue-property plots (i)

These plots are drawn for all protein, RNA, DNA and oligosaccharide chains in the entry. The first graphic for a chain summarises the proportions of the various outlier classes displayed in the second graphic. The second graphic shows the sequence view annotated by issues in geometry and electron density. Residues are color-coded according to the number of geometric quality criteria for which they contain at least one outlier: green = 0, yellow = 1, orange = 2 and red = 3 or more. A red dot above a residue indicates a poor fit to the electron density (RSRZ > 2). Stretches of 2 or more consecutive residues without any outlier are shown as a green connector. Residues present in the sample, but not in the model, are shown in grey.

• Molecule 1: Gem-associated protein 5

Chain A:

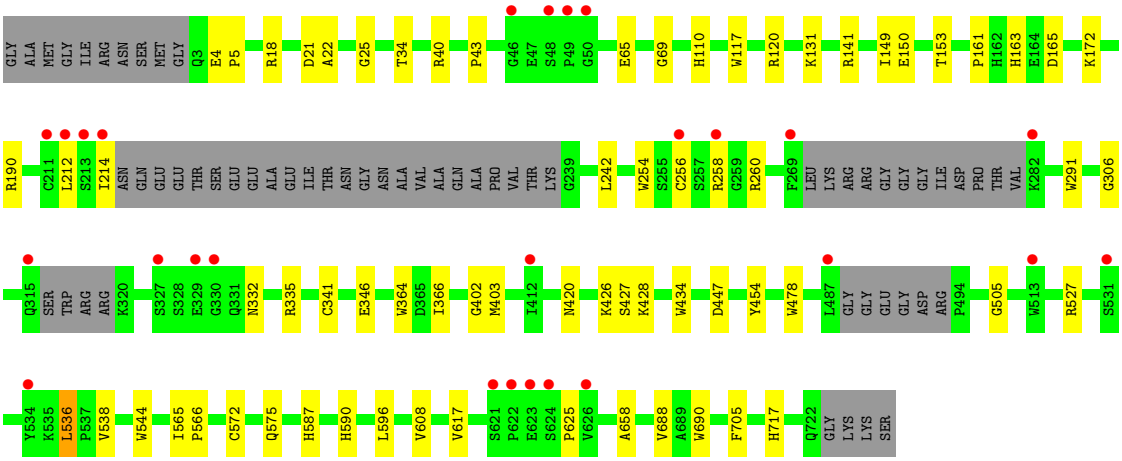

• Molecule 1: Gem-associated protein 5

Chain B:

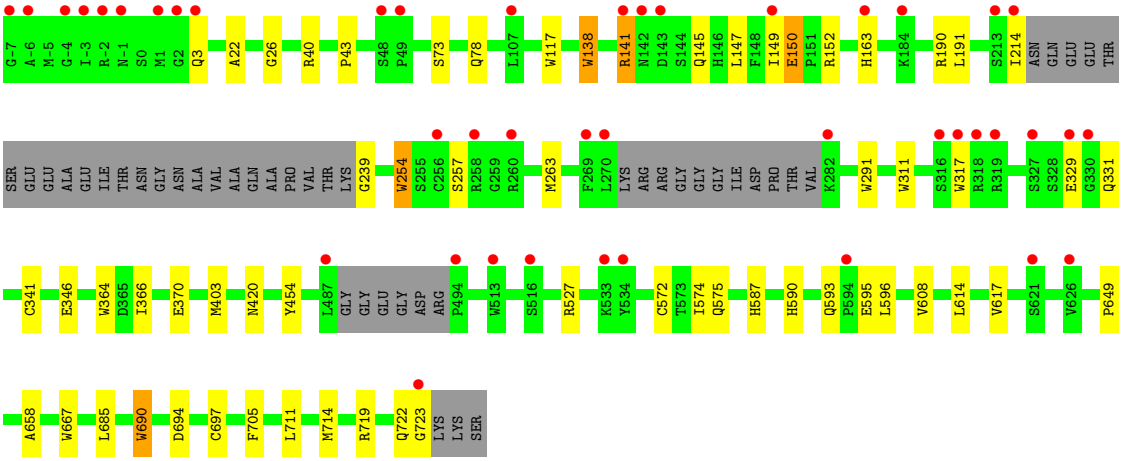

• Molecule 2: U4 snRNA (5'-R(*GP*CP*AP*AP*UP*UP*UP*UP*UP*GP*AP*CP*A)-3')

Chain C:

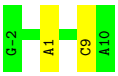

• Molecule 2: U4 snRNA (5'-R(*GP*CP*AP*AP*UP*UP*UP*UP*UP*GP*AP*CP*A)-3')

Chain D:

4 Data and refinement statistics (i)

Property	Value	Source
Space group	P 21 21 21	Depositor
Cell constants a, b, c, α, β, γ	98.65Å 107.19Å 151.48Å 90.00° 90.00° 90.00°	Depositor
Resolution (Å)	50.00 – 1.90 43.75 – 1.90	Depositor EDS
% Data completeness (in resolution range)	99.2 (50.00-1.90) 99.2 (43.75-1.90)	Depositor EDS
R_{merge}	0.12	Depositor
R_{sym}	(Not available)	Depositor
$< I/\sigma(I) >$ [1]	2.36 (at 1.89Å)	Xtriage
Refinement program	REFMAC 5.6.0117	Depositor
R, R_{free}	0.170 , 0.206 0.170 , 0.206	Depositor DCC
R_{free} test set	6307 reflections (5.02%)	wwPDB-VP
Wilson B-factor (Å^2)	19.3	Xtriage
Anisotropy	0.103	Xtriage
Bulk solvent k_{sol}(e/Å^3), B_{sol}(Å^2)	0.34 , 48.2	EDS
L-test for twinning[2]	$< \|L\| > = 0.49$, $< L^2 > = 0.33$	Xtriage
Estimated twinning fraction	No twinning to report.	Xtriage
F_o,F_c correlation	0.96	EDS
Total number of atoms	12751	wwPDB-VP
Average B, all atoms (Å^2)	24.0	wwPDB-VP

Xtriage's analysis on translational NCS is as follows: *The largest off-origin peak in the Patterson function is 16.14% of the height of the origin peak. No significant pseudotranslation is detected.*

[1]Intensities estimated from amplitudes.

[2]Theoretical values of $< |L| >$, $< L^2 >$ for acentric reflections are 0.5, 0.333 respectively for untwinned datasets, and 0.375, 0.2 for perfectly twinned datasets.

5 Model quality (i)

5.1 Standard geometry (i)

The Z score for a bond length (or angle) is the number of standard deviations the observed value is removed from the expected value. A bond length (or angle) with $|Z| > 5$ is considered an outlier worth inspection. RMSZ is the root-mean-square of all Z scores of the bond lengths (or angles).

Mol	Chain	Bond lengths		Bond angles	
		RMSZ	#|Z| >5	RMSZ	#|Z| >5
1	A	0.65	7/5628 (0.1%)	0.64	0/7667
1	B	0.64	9/5722 (0.2%)	0.65	0/7786
2	C	0.40	0/302	0.77	0/468
2	D	0.39	0/279	0.80	1/431 (0.2%)
All	All	0.63	16/11931 (0.1%)	0.65	1/16352 (0.0%)

All (16) bond length outliers are listed below:

Mol	Chain	Res	Type	Atoms	Z	Observed(Å)	Ideal(Å)
1	B	291	TRP	CD2-CE2	5.89	1.48	1.41
1	B	254	TRP	CD2-CE2	5.80	1.48	1.41
1	A	478	TRP	CD2-CE2	5.68	1.48	1.41
1	B	117	TRP	CD2-CE2	5.52	1.48	1.41
1	B	364	TRP	CD2-CE2	5.51	1.48	1.41
1	A	117	TRP	CD2-CE2	5.49	1.48	1.41
1	B	690	TRP	CD2-CE2	5.40	1.47	1.41
1	B	317	TRP	CD2-CE2	5.39	1.47	1.41
1	A	291	TRP	CD2-CE2	5.34	1.47	1.41
1	B	311	TRP	CD2-CE2	5.33	1.47	1.41
1	A	254	TRP	CD2-CE2	5.31	1.47	1.41
1	A	434	TRP	CD2-CE2	5.26	1.47	1.41
1	A	364	TRP	CD2-CE2	5.23	1.47	1.41
1	B	667	TRP	CD2-CE2	5.09	1.47	1.41
1	B	138	TRP	CD2-CE2	5.03	1.47	1.41
1	A	544	TRP	CD2-CE2	5.00	1.47	1.41

All (1) bond angle outliers are listed below:

Mol	Chain	Res	Type	Atoms	Z	Observed(^{o})	Ideal(^{o})
2	D	-1	C	P-O3'-C3'	6.80	127.86	119.70

There are no chirality outliers.

There are no planarity outliers.

5.2 Too-close contacts (i)

In the following table, the Non-H and H(model) columns list the number of non-hydrogen atoms and hydrogen atoms in the chain respectively. The H(added) column lists the number of hydrogen atoms added and optimized by MolProbity. The Clashes column lists the number of clashes within the asymmetric unit, whereas Symm-Clashes lists symmetry-related clashes.

Mol	Chain	Non-H	H(model)	H(added)	Clashes	Symm-Clashes
1	A	5397	0	5303	50	0
1	B	5502	0	5422	42	0
2	C	271	0	140	2	0
2	D	251	0	128	6	0
3	A	643	0	0	9	0
3	B	536	0	0	12	0
3	C	84	0	0	2	0
3	D	67	0	0	1	0
All	All	12751	0	10993	98	0

The all-atom clashscore is defined as the number of clashes found per 1000 atoms (including hydrogen atoms). The all-atom clashscore for this structure is 4.

All (98) close contacts within the same asymmetric unit are listed below, sorted by their clash magnitude.

Atom-1	Atom-2	Interatomic distance (Å)	Clash overlap (Å)
2:D:-1:C:H5'	2:D:-1:C:C6	1.59	1.34
1:A:403:MET:CE	1:A:420:ASN:HB3	1.75	1.15
1:A:403:MET:HE2	1:A:420:ASN:HB3	1.31	1.09
2:D:-1:C:H5'	2:D:-1:C:H6	0.89	1.00
2:D:-1:C:C6	2:D:-1:C:C5'	2.49	0.95
1:A:590[A]:HIS:HE1	3:A:1328:HOH:O	1.53	0.90
1:A:575:GLN:HG2	3:A:1351:HOH:O	1.72	0.89
1:B:590[B]:HIS:HE1	3:B:1234:HOH:O	1.60	0.83
1:A:658:ALA:HB2	1:A:688[B]:VAL:HG13	1.60	0.83
1:B:163[B]:HIS:CD2	3:B:815:HOH:O	2.32	0.82
1:A:242:LEU:HD22	1:A:256[A]:CYS:SG	2.18	0.82
1:B:40[B]:ARG:NH1	3:B:801:HOH:O	2.13	0.79
1:A:212:LEU:HD23	1:A:214:ILE:HG23	1.65	0.78
1:A:212:LEU:CD2	1:A:214:ILE:HG23	2.13	0.77
1:B:608[A]:VAL:HG23	3:B:1232:HOH:O	1.85	0.76
1:B:714:MET:HG2	3:B:1275:HOH:O	1.86	0.74

Continued on next page...

Continued from previous page...

Atom-1	Atom-2	Interatomic distance (Å)	Clash overlap (Å)
1:B:22:ALA:N	1:B:341[B]:CYS:SG	2.63	0.72
1:A:403:MET:HE1	1:A:420:ASN:HB3	1.68	0.70
1:B:150:GLU:OE1	1:B:190:ARG:NH1	2.27	0.68
1:A:608[A]:VAL:HG23	3:A:1283:HOH:O	1.94	0.66
1:A:212:LEU:CD2	1:A:214:ILE:CG2	2.75	0.65
1:A:258:ARG:HH11	1:A:260:ARG:HH11	1.44	0.65
1:B:3:GLN:HG3	1:B:694:ASP:OD2	1.97	0.64
1:A:22:ALA:N	1:A:341[B]:CYS:SG	2.70	0.64
1:B:590[B]:HIS:CE1	3:B:1234:HOH:O	2.43	0.63
1:B:697[B]:CYS:SG	1:B:711:LEU:CD2	2.87	0.63
1:B:145:GLN:HG2	1:B:147[A]:LEU:CD1	2.28	0.62
1:A:163[A]:HIS:ND1	3:A:801:HOH:O	2.23	0.62
1:B:73[B]:SER:OG	1:B:78:GLN:O	2.17	0.61
1:A:149:ILE:HG22	1:A:150:GLU:HG3	1.83	0.61
1:A:403:MET:HE2	1:A:420:ASN:CB	2.20	0.61
1:A:658:ALA:HB2	1:A:688[B]:VAL:CG1	2.30	0.60
1:B:214:ILE:HG23	1:B:263:MET:HE1	1.83	0.60
1:A:332:ASN:HB2	3:A:1021:HOH:O	2.02	0.59
1:B:145:GLN:HG2	1:B:147[A]:LEU:HD12	1.83	0.58
1:B:214:ILE:HG23	1:B:263:MET:CE	2.34	0.58
1:A:25:GLY:HA2	1:A:346[A]:GLU:HG3	1.86	0.57
1:A:625:PRO:HB2	3:A:890:HOH:O	2.03	0.57
1:B:239:GLY:HA3	1:B:257:SER:HB3	1.87	0.57
1:B:22:ALA:CB	1:B:341[B]:CYS:SG	2.93	0.57
1:A:426:LYS:HA	3:A:857:HOH:O	2.04	0.56
1:A:153[B]:THR:OG1	1:A:172:LYS:HB3	2.07	0.55
1:B:150:GLU:HB2	1:B:152:ARG:HB2	1.87	0.55
1:B:149:ILE:HG22	1:B:150:GLU:HG2	1.90	0.54
1:B:719:ARG:HD3	3:B:1021:HOH:O	2.07	0.53
1:A:110:HIS:CG	1:A:131:LYS:HG3	2.44	0.53
1:B:22:ALA:HB3	1:B:341[B]:CYS:SG	2.49	0.53
1:B:403[B]:MET:CE	2:D:0:A:H61	2.22	0.53
1:A:43:PRO:HB2	1:A:346[B]:GLU:OE2	2.10	0.52
1:B:722:GLN:HB2	3:B:1043:HOH:O	2.09	0.52
1:A:212:LEU:HD22	1:A:214:ILE:CG2	2.40	0.51
1:A:43:PRO:HD2	1:A:346[B]:GLU:HG2	1.91	0.51
1:B:572:CYS:HB2	1:B:617[A]:VAL:HG21	1.93	0.50
1:B:723:GLY:HA2	3:B:876:HOH:O	2.11	0.50
1:B:403[B]:MET:SD	1:B:420:ASN:HB3	2.52	0.50
1:A:565:ILE:HB	1:A:566:PRO:HA	1.94	0.48
2:D:7:G:OP1	3:D:101:HOH:O	2.19	0.48

Continued on next page...

Continued from previous page...

Atom-1	Atom-2	Interatomic distance (Å)	Clash overlap (Å)
1:B:329:GLU:C	1:B:331:GLN:H	2.17	0.48
1:A:505:GLY:HA3	1:A:538:VAL:HG13	1.96	0.48
2:C:9:C:OP1	3:C:101:HOH:O	2.20	0.47
1:A:120:ARG:HD3	1:A:161:PRO:O	2.15	0.47
1:A:153[B]:THR:OG1	1:A:172:LYS:CB	2.62	0.47
1:B:370:GLU:HG3	3:B:1292:HOH:O	2.15	0.47
1:B:403[B]:MET:HE1	2:D:0:A:H61	1.79	0.47
1:B:43:PRO:HD2	1:B:346[A]:GLU:HG2	1.97	0.46
1:B:26:GLY:O	1:B:40[B]:ARG:HD2	2.16	0.46
1:A:717:HIS:HD2	3:A:1376:HOH:O	1.97	0.46
1:A:572:CYS:HB2	1:A:617[A]:VAL:HG11	1.97	0.45
1:A:4:GLU:HB2	1:A:5:PRO:HD2	1.98	0.45
1:A:40:ARG:NH2	3:A:814:HOH:O	2.50	0.45
1:A:21:ASP:C	1:A:341[B]:CYS:SG	2.96	0.45
1:B:163[B]:HIS:HD2	3:B:815:HOH:O	1.84	0.44
1:A:212:LEU:HD22	1:A:214:ILE:HG23	1.94	0.44
1:A:22:ALA:CB	1:A:341[B]:CYS:SG	3.06	0.44
1:A:34:THR:HG22	1:A:65:GLU:C	2.38	0.44
1:A:242:LEU:CD2	1:A:256[A]:CYS:SG	3.01	0.44
1:B:574:ILE:HD11	1:B:614:LEU:HD21	2.00	0.44
2:C:1:A:N6	3:C:104:HOH:O	2.50	0.43
1:A:306:GLY:HA3	1:A:335:ARG:O	2.19	0.43
1:B:590[B]:HIS:NE2	1:B:649:PRO:O	2.45	0.43
1:A:403:MET:HE1	1:A:420:ASN:CB	2.44	0.43
1:B:138:TRP:HB3	1:B:141:ARG:HD3	2.01	0.43
1:A:527:ARG:HD2	1:A:536:LEU:HD11	2.01	0.43
1:A:403:MET:CE	1:A:420:ASN:CB	2.69	0.43
1:B:658:ALA:HB1	1:B:685:LEU:HB3	2.01	0.42
1:B:263:MET:HB2	1:B:263:MET:HE2	1.89	0.42
1:A:527:ARG:HG3	1:A:536:LEU:HD21	2.01	0.42
1:B:40[B]:ARG:NH2	3:B:819:HOH:O	2.52	0.42
1:B:403[B]:MET:HE2	1:B:403[B]:MET:HB2	1.76	0.42
1:B:587:HIS:HB3	1:B:596:LEU:O	2.20	0.41
1:A:163[B]:HIS:CE1	1:A:165:ASP:HB2	2.56	0.41
1:A:428:LYS:HB2	1:A:447:ASP:HB2	2.03	0.41
1:A:18:ARG:O	1:A:69:GLY:HA2	2.20	0.41
1:A:402:GLY:HA2	1:A:427:SER:O	2.20	0.41
1:A:587:HIS:HB3	1:A:596:LEU:O	2.21	0.41
1:A:150:GLU:OE2	1:A:190:ARG:NH2	2.37	0.40
1:B:191:LEU:HD13	1:B:254:TRP:CG	2.57	0.40
1:B:366:ILE:HD13	1:B:366:ILE:HA	1.91	0.40

There are no symmetry-related clashes.

5.3 Torsion angles (i)

5.3.1 Protein backbone (i)

In the following table, the Percentiles column shows the percent Ramachandran outliers of the chain as a percentile score with respect to all X-ray entries followed by that with respect to entries of similar resolution.

The Analysed column shows the number of residues for which the backbone conformation was analysed, and the total number of residues.

Mol	Chain	Analysed	Favoured	Allowed	Outliers	Percentiles	
1	A	689/734 (94%)	665 (96%)	24 (4%)	0	100	100
1	B	703/734 (96%)	676 (96%)	27 (4%)	0	100	100
All	All	1392/1468 (95%)	1341 (96%)	51 (4%)	0	100	100

There are no Ramachandran outliers to report.

5.3.2 Protein sidechains (i)

In the following table, the Percentiles column shows the percent sidechain outliers of the chain as a percentile score with respect to all X-ray entries followed by that with respect to entries of similar resolution.

The Analysed column shows the number of residues for which the sidechain conformation was analysed, and the total number of residues.

Mol	Chain	Analysed	Rotameric	Outliers	Percentiles	
1	A	615/634 (97%)	608 (99%)	7 (1%)	73	73
1	B	622/634 (98%)	613 (99%)	9 (1%)	67	65
All	All	1237/1268 (98%)	1221 (99%)	16 (1%)	69	68

All (16) residues with a non-rotameric sidechain are listed below:

Mol	Chain	Res	Type
1	A	141	ARG
1	A	366	ILE
1	A	454	TYR
1	A	536	LEU
1	A	690[A]	TRP

Continued on next page...

Continued from previous page...

Mol	Chain	Res	Type
1	A	690[B]	TRP
1	A	705	PHE
1	B	141	ARG
1	B	150	GLU
1	B	454	TYR
1	B	527	ARG
1	B	575	GLN
1	B	593	GLN
1	B	595	GLU
1	B	690	TRP
1	B	705	PHE

Sometimes sidechains can be flipped to improve hydrogen bonding and reduce clashes. All (1) such sidechains are listed below:

Mol	Chain	Res	Type
1	B	722	GLN

5.3.3 RNA (i)

Mol	Chain	Analysed	Backbone Outliers	Pucker Outliers
2	C	12/13 (92%)	0	0
2	D	12/13 (92%)	2 (16%)	1 (8%)
All	All	24/26 (92%)	2 (8%)	1 (4%)

All (2) RNA backbone outliers are listed below:

Mol	Chain	Res	Type
2	D	0	A
2	D	4	U

All (1) RNA pucker outliers are listed below:

Mol	Chain	Res	Type
2	D	-1	C

5.4 Non-standard residues in protein, DNA, RNA chains (i)

There are no non-standard protein/DNA/RNA residues in this entry.

5.5 Carbohydrates (i)

There are no monosaccharides in this entry.

5.6 Ligand geometry (i)

There are no ligands in this entry.

5.7 Other polymers (i)

There are no such residues in this entry.

5.8 Polymer linkage issues (i)

There are no chain breaks in this entry.

6 Fit of model and data (i)

6.1 Protein, DNA and RNA chains (i)

In the following table, the column labelled '#RSRZ> 2' contains the number (and percentage) of RSRZ outliers, followed by percent RSRZ outliers for the chain as percentile scores relative to all X-ray entries and entries of similar resolution. The OWAB column contains the minimum, median, 95th percentile and maximum values of the occupancy-weighted average B-factor per residue. The column labelled 'Q< 0.9' lists the number of (and percentage) of residues with an average occupancy less than 0.9.

Mol	Chain	Analysed	<RSRZ>	#RSRZ>2			OWAB(Å^2)	Q<0.9
1	A	674/734 (91%)	-0.06	26 (3%)	39	42	8, 18, 45, 75	1 (0%)
1	B	690/734 (94%)	0.14	43 (6%)	20	23	9, 22, 55, 79	1 (0%)
2	C	13/13 (100%)	-0.75	0	100	100	12, 18, 24, 26	0
2	D	12/13 (92%)	-0.35	1 (8%)	11	13	16, 21, 31, 90	0
All	All	1389/1494 (92%)	0.03	70 (5%)	28	32	8, 20, 52, 90	2 (0%)

All (70) RSRZ outliers are listed below:

Mol	Chain	Res	Type	RSRZ
1	B	-4	GLY	6.4
1	B	269	PHE	6.3
1	B	270	LEU	5.8
1	B	-3	ILE	5.8
1	B	487	LEU	5.6
1	A	214	ILE	5.6
1	B	-2	ARG	5.1
1	B	-7	GLY	4.5
1	B	723	GLY	4.2
1	A	49	PRO	4.2
1	A	534	TYR	4.2
1	A	487	LEU	4.0
1	B	2	GLY	3.7
1	B	-6	ALA	3.7
1	B	49	PRO	3.4
1	A	626	VAL	3.4
1	A	258	ARG	3.3
1	B	317	TRP	3.3
1	B	256	CYS	3.2
1	A	329	GLU	3.2
1	B	329	GLU	3.2

Continued on next page...

Continued from previous page...

Mol	Chain	Res	Type	RSRZ
1	A	624	SER	3.2
1	B	141	ARG	3.1
2	D	-1	C	3.1
1	B	-1	ASN	3.1
1	B	316	SER	3.1
1	B	594	PRO	3.0
1	B	48	SER	3.0
1	B	534	TYR	3.0
1	A	623	GLU	3.0
1	B	142	ASN	2.9
1	A	48	SER	2.9
1	A	622	PRO	2.8
1	B	513	TRP	2.8
1	B	621	SER	2.8
1	B	318	ARG	2.6
1	B	533	LYS	2.6
1	B	214	ILE	2.6
1	A	213	SER	2.6
1	A	412	ILE	2.5
1	B	494	PRO	2.5
1	B	282	LYS	2.5
1	A	211[A]	CYS	2.5
1	B	327	SER	2.5
1	A	330	GLY	2.5
1	B	107	LEU	2.5
1	B	258	ARG	2.4
1	A	282	LYS	2.4
1	A	46	GLY	2.4
1	A	621	SER	2.4
1	B	3	GLN	2.4
1	A	269	PHE	2.4
1	B	149	ILE	2.4
1	B	626	VAL	2.4
1	B	330	GLY	2.4
1	B	260	ARG	2.4
1	A	531	SER	2.3
1	B	163[A]	HIS	2.2
1	A	315	GLN	2.2
1	B	516	SER	2.2
1	A	327	SER	2.2
1	B	319	ARG	2.2
1	B	143	ASP	2.2

Continued on next page...

Continued from previous page...

Mol	Chain	Res	Type	RSRZ
1	A	256[A]	CYS	2.1
1	B	213	SER	2.1
1	A	212	LEU	2.1
1	A	513	TRP	2.1
1	A	50	GLY	2.1
1	B	184	LYS	2.1
1	B	1	MET	2.0

6.2 Non-standard residues in protein, DNA, RNA chains (i)

There are no non-standard protein/DNA/RNA residues in this entry.

6.3 Carbohydrates (i)

There are no monosaccharides in this entry.

6.4 Ligands (i)

There are no ligands in this entry.

6.5 Other polymers (i)

There are no such residues in this entry.