Full wwPDB X-ray Structure Validation Report (i)

Sep 7, 2023 – 03:37 AM EDT

PDB ID	:	4GP0
Title	:	The crystal structure of human fascin 1 R149A K150A R151A mutant
Authors	:	Yang, S.Y.; Huang, F.K.; Huang, J.; Chen, S.; Jakoncic, J.; Leo-Macias, A.; Diaz-Avalos, R.; Chen, L.; Zhang, J.J.; Huang, X.Y.
Deposited on	:	2012-08-20
Resolution	:	2.50 Å(reported)

This is a Full wwPDB X-ray Structure Validation Report for a publicly released PDB entry.

We welcome your comments at *validation@mail.wwpdb.org*
A user guide is available at
https://www.wwpdb.org/validation/2017/XrayValidationReportHelp
with specific help available everywhere you see the (i) symbol.

The types of validation reports are described at
http://www.wwpdb.org/validation/2017/FAQs#types.

The following versions of software and data (see references (i)) were used in the production of this report:

MolProbity	:	4.02b-467
Mogul	:	1.8.5 (274361), CSD as541be (2020)
Xtriage (Phenix)	:	1.13
EDS	:	2.35
Percentile statistics	:	20191225.v01 (using entries in the PDB archive December 25th 2019)
Refmac	:	5.8.0158
CCP4	:	7.0.044 (Gargrove)
Ideal geometry (proteins)	:	Engh & Huber (2001)
Ideal geometry (DNA, RNA)	:	Parkinson et al. (1996)
Validation Pipeline (wwPDB-VP)	:	2.35

1 Overall quality at a glance (i)

The following experimental techniques were used to determine the structure:
X-RAY DIFFRACTION

The reported resolution of this entry is 2.50 Å.

Percentile scores (ranging between 0-100) for global validation metrics of the entry are shown in the following graphic. The table shows the number of entries on which the scores are based.

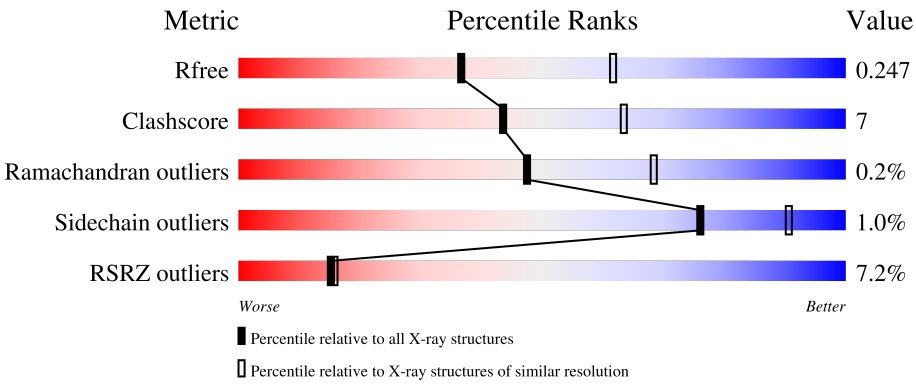

Metric	Whole archive (#Entries)	Similar resolution (#Entries, resolution range(Å))
R_{free}	130704	4661 (2.50-2.50)
Clashscore	141614	5346 (2.50-2.50)
Ramachandran outliers	138981	5231 (2.50-2.50)
Sidechain outliers	138945	5233 (2.50-2.50)
RSRZ outliers	127900	4559 (2.50-2.50)

The table below summarises the geometric issues observed across the polymeric chains and their fit to the electron density. The red, orange, yellow and green segments of the lower bar indicate the fraction of residues that contain outliers for >=3, 2, 1 and 0 types of geometric quality criteria respectively. A grey segment represents the fraction of residues that are not modelled. The numeric value for each fraction is indicated below the corresponding segment, with a dot representing fractions <=5% The upper red bar (where present) indicates the fraction of residues that have poor fit to the electron density. The numeric value is given above the bar.

Mol	Chain	Length	Quality of chain
1	A	493	7% 85% 11% • •
1	B	493	7% 85% 12% •

The following table lists non-polymeric compounds, carbohydrate monomers and non-standard residues in protein, DNA, RNA chains that are outliers for geometric or electron-density-fit criteria:

Mol	Type	Chain	Res	Chirality	Geometry	Clashes	Electron density
5	DTT	B	531	-	-	X	-

2 Entry composition (i)

There are 7 unique types of molecules in this entry. The entry contains 7946 atoms, of which 0 are hydrogens and 0 are deuteriums.

In the tables below, the ZeroOcc column contains the number of atoms modelled with zero occupancy, the AltConf column contains the number of residues with at least one atom in alternate conformation and the Trace column contains the number of residues modelled with at most 2 atoms.

- Molecule 1 is a protein called Fascin.

Mol	Chain	Residues	Atoms					ZeroOcc	AltConf	Trace
			Total	C	N	O	S			
1	A	477	3712	2325	655	718	14	0	2	0
1	B	483	3760	2353	666	726	15	0	2	0

There are 6 discrepancies between the modelled and reference sequences:

Chain	Residue	Modelled	Actual	Comment	Reference
A	149	ALA	ARG	engineered mutation	UNP Q16658
A	150	ALA	LYS	engineered mutation	UNP Q16658
A	151	ALA	ARG	engineered mutation	UNP Q16658
B	149	ALA	ARG	engineered mutation	UNP Q16658
B	150	ALA	LYS	engineered mutation	UNP Q16658
B	151	ALA	ARG	engineered mutation	UNP Q16658

- Molecule 2 is BROMIDE ION (three-letter code: BR) (formula: Br).

Mol	Chain	Residues	Atoms		ZeroOcc	AltConf
			Total	Br		
2	A	1	1	1	0	0
2	B	6	6	6	0	0

- Molecule 3 is CHLORIDE ION (three-letter code: CL) (formula: Cl).

Mol	Chain	Residues	Atoms		ZeroOcc	AltConf
			Total	Cl		
3	A	11	11	11	0	0
3	B	18	18	18	0	0

- Molecule 4 is GLYCEROL (three-letter code: GOL) (formula: $C_3H_8O_3$).

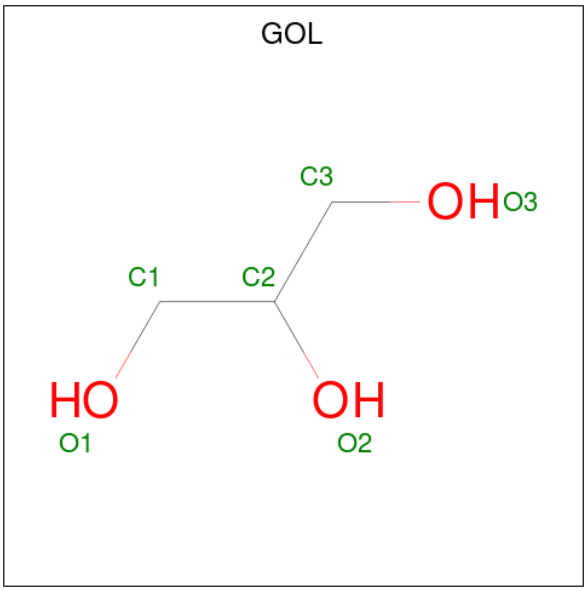

Mol	Chain	Residues	Atoms			ZeroOcc	AltConf
			Total	C	O		
4	A	1	6	3	3	0	0
4	A	1	6	3	3	0	0
4	A	1	6	3	3	0	0
4	A	1	6	3	3	0	0
4	B	1	6	3	3	0	0
4	B	1	6	3	3	0	0
4	B	1	6	3	3	0	0
4	B	1	6	3	3	0	0
4	B	1	6	3	3	0	0
4	B	1	6	3	3	0	0

- Molecule 5 is 2,3-DIHYDROXY-1,4-DITHIOBUTANE (three-letter code: DTT) (formula: $C_4H_{10}O_2S_2$).

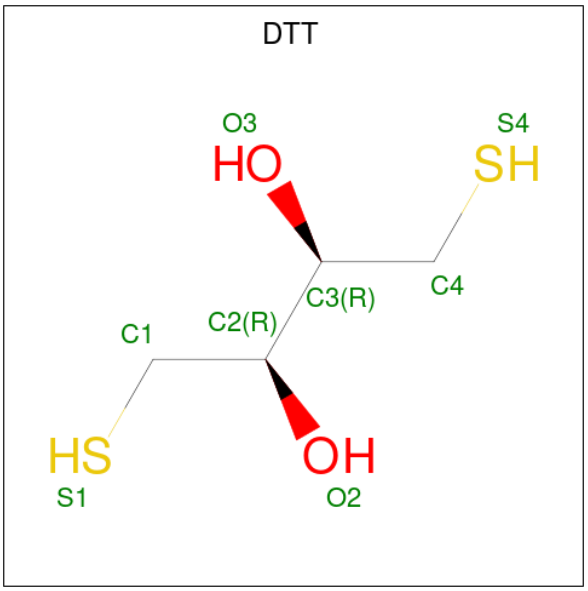

Mol	Chain	Residues	Atoms				ZeroOcc	AltConf
			Total	C	O	S		
5	A	1	8	4	2	2	0	0
			Total	C	O	S		
5	B	1	8	4	2	2	0	0
			Total	C	O	S		
5	B	1	8	4	2	2	0	0

- Molecule 6 is 4-(2-HYDROXYETHYL)-1-PIPERAZINE ETHANESULFONIC ACID (three-letter code: EPE) (formula: $C_8H_{18}N_2O_4S$).

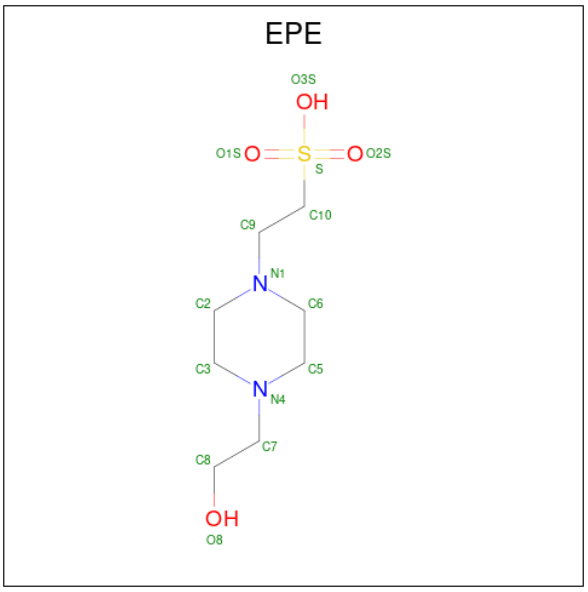

Mol	Chain	Residues	Atoms					ZeroOcc	AltConf
			Total	C	N	O	S		
6	B	1	15	8	2	4	1	0	0

- Molecule 7 is water.

Mol	Chain	Residues	Atoms		ZeroOcc	AltConf
			Total	O		
7	A	180	180	180	0	0
			Total	O		
7	B	159	159	159	0	0

3 Residue-property plots (i)

These plots are drawn for all protein, RNA, DNA and oligosaccharide chains in the entry. The first graphic for a chain summarises the proportions of the various outlier classes displayed in the second graphic. The second graphic shows the sequence view annotated by issues in geometry and electron density. Residues are color-coded according to the number of geometric quality criteria for which they contain at least one outlier: green = 0, yellow = 1, orange = 2 and red = 3 or more. A red dot above a residue indicates a poor fit to the electron density (RSRZ > 2). Stretches of 2 or more consecutive residues without any outlier are shown as a green connector. Residues present in the sample, but not in the model, are shown in grey.

- Molecule 1: Fascin

Chain A:

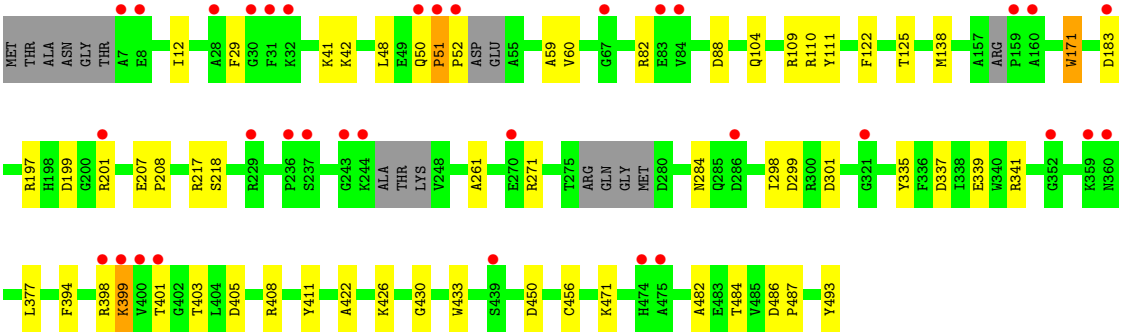

- Molecule 1: Fascin

Chain B:

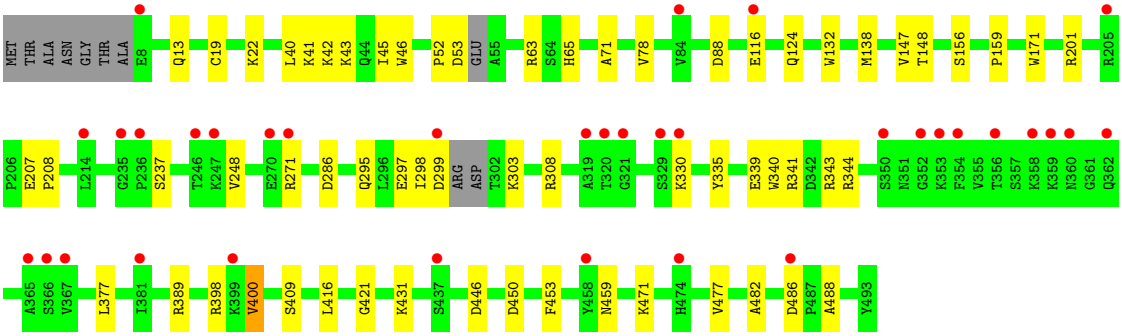

4 Data and refinement statistics (i)

Property	Value	Source
Space group	C 1 2 1	Depositor
Cell constants a, b, c, α, β, γ	159.91Å 71.22Å 109.73Å 90.00° 130.28° 90.00°	Depositor
Resolution (Å)	30.00 – 2.50 29.25 – 2.49	Depositor EDS
% Data completeness (in resolution range)	99.6 (30.00-2.50) 99.7 (29.25-2.49)	Depositor EDS
R_{merge}	0.11	Depositor
R_{sym}	(Not available)	Depositor
$< I/\sigma(I) >$ [1]	2.12 (at 2.48Å)	Xtriage
Refinement program	REFMAC 5.6.0117	Depositor
R, R_{free}	0.200 , 0.249 0.200 , 0.247	Depositor DCC
R_{free} test set	1682 reflections (5.07%)	wwPDB-VP
Wilson B-factor (Å^2)	39.7	Xtriage
Anisotropy	0.222	Xtriage
Bulk solvent k_{sol}(e/Å^3), B_{sol}(Å^2)	0.41 , 49.7	EDS
L-test for twinning[2]	$< \|L\| > = 0.49$, $< L^2 > = 0.32$	Xtriage
Estimated twinning fraction	0.027 for -h-2*l,-k,l	Xtriage
F_o,F_c correlation	0.94	EDS
Total number of atoms	7946	wwPDB-VP
Average B, all atoms (Å^2)	39.0	wwPDB-VP

Xtriage's analysis on translational NCS is as follows: *The largest off-origin peak in the Patterson function is 5.02% of the height of the origin peak. No significant pseudotranslation is detected.*

[1]Intensities estimated from amplitudes.

[2]Theoretical values of $< |L| >$, $< L^2 >$ for acentric reflections are 0.5, 0.333 respectively for untwinned datasets, and 0.375, 0.2 for perfectly twinned datasets.

5 Model quality (i)

5.1 Standard geometry (i)

Bond lengths and bond angles in the following residue types are not validated in this section: BR, GOL, EPE, DTT, CL

The Z score for a bond length (or angle) is the number of standard deviations the observed value is removed from the expected value. A bond length (or angle) with $|Z| > 5$ is considered an outlier worth inspection. RMSZ is the root-mean-square of all Z scores of the bond lengths (or angles).

Mol	Chain	Bond lengths		Bond angles	
		RMSZ	$\#\|Z\| >5$	RMSZ	$\#\|Z\| >5$
1	A	0.51	2/3795 (0.1%)	0.62	0/5131
1	B	0.51	3/3845 (0.1%)	0.62	0/5200
All	All	0.51	5/7640 (0.1%)	0.62	0/10331

All (5) bond length outliers are listed below:

Mol	Chain	Res	Type	Atoms	Z	Observed(Å)	Ideal(Å)
1	A	433	TRP	CD2-CE2	5.15	1.47	1.41
1	B	46	TRP	CD2-CE2	5.07	1.47	1.41
1	B	340	TRP	CD2-CE2	5.01	1.47	1.41
1	A	171	TRP	CD2-CE2	5.01	1.47	1.41
1	B	132	TRP	CD2-CE2	5.01	1.47	1.41

There are no bond angle outliers.

There are no chirality outliers.

There are no planarity outliers.

5.2 Too-close contacts (i)

In the following table, the Non-H and H(model) columns list the number of non-hydrogen atoms and hydrogen atoms in the chain respectively. The H(added) column lists the number of hydrogen atoms added and optimized by MolProbity. The Clashes column lists the number of clashes within the asymmetric unit, whereas Symm-Clashes lists symmetry-related clashes.

Mol	Chain	Non-H	H(model)	H(added)	Clashes	Symm-Clashes
1	A	3712	0	3584	54	0
1	B	3760	0	3638	49	0
2	A	1	0	0	1	0
2	B	6	0	0	2	0

Continued on next page...

Continued from previous page...

Mol	Chain	Non-H	H(model)	H(added)	Clashes	Symm-Clashes
3	A	11	0	0	0	0
3	B	18	0	0	3	0
4	A	24	0	32	1	0
4	B	36	0	48	5	0
5	A	8	0	10	0	0
5	B	16	0	20	7	0
6	B	15	0	18	1	0
7	A	180	0	0	4	0
7	B	159	0	0	1	0
All	All	7946	0	7350	100	0

The all-atom clashscore is defined as the number of clashes found per 1000 atoms (including hydrogen atoms). The all-atom clashscore for this structure is 7.

All (100) close contacts within the same asymmetric unit are listed below, sorted by their clash magnitude.

Atom-1	Atom-2	Interatomic distance (Å)	Clash overlap (Å)
1:A:51:PRO:HB2	1:A:52:PRO:CD	1.59	1.29
1:A:50:GLN:OE1	1:A:51:PRO:HD2	1.31	1.23
1:A:51:PRO:HB2	1:A:52:PRO:HD2	1.32	1.07
1:B:271:ARG:HH12	1:B:286:ASP:HB3	1.21	0.98
1:A:41:LYS:HG2	1:A:42:LYS:H	1.29	0.98
1:A:51:PRO:HB2	1:A:52:PRO:HD3	1.46	0.95
1:A:50:GLN:OE1	1:A:51:PRO:CD	2.15	0.95
1:A:51:PRO:CB	1:A:52:PRO:CD	2.43	0.95
1:B:271:ARG:NH1	1:B:286:ASP:HB3	1.83	0.93
1:A:401:THR:HG21	1:A:403:THR:OG1	1.70	0.91
1:A:50:GLN:CD	1:A:51:PRO:HD2	1.97	0.84
1:A:50:GLN:OE1	1:A:50:GLN:HA	1.78	0.83
1:B:124:GLN:NE2	3:B:507:CL:CL	2.50	0.82
1:B:41:LYS:HB3	5:B:531:DTT:H41	1.63	0.81
1:A:41:LYS:HG2	1:A:42:LYS:N	1.98	0.78
1:A:51:PRO:CB	1:A:52:PRO:HD3	2.16	0.73
1:B:42:LYS:HB3	5:B:531:DTT:H11	1.71	0.73
1:B:42:LYS:HB2	5:B:531:DTT:H42	1.70	0.72
1:A:398:ARG:O	1:A:399:LYS:HB2	1.91	0.70
1:A:401:THR:CG2	1:A:403:THR:OG1	2.41	0.67
1:A:261:ALA:HB2	1:A:493:TYR:OH	1.95	0.67
1:A:52:PRO:HD2	7:A:684:HOH:O	1.93	0.66
1:B:486:ASP:OD1	1:B:486:ASP:C	2.36	0.63
1:B:63:ARG:NH1	7:B:681:HOH:O	2.33	0.61

Continued on next page...

Continued from previous page...

Atom-1	Atom-2	Interatomic distance (Å)	Clash overlap (Å)
1:A:41:LYS:CG	1:A:42:LYS:H	2.09	0.61
1:A:456:CYS:O	4:A:515:GOL:H11	2.00	0.61
1:B:271:ARG:HH12	1:B:286:ASP:CB	2.05	0.61
1:A:125:THR:HB	7:A:752:HOH:O	2.01	0.60
1:A:60:VAL:HG12	1:A:218:SER:HB2	1.83	0.59
1:A:197:ARG:NH2	1:A:199:ASP:OD2	2.37	0.58
1:A:301:ASP:HB3	1:B:431:LYS:HE3	1.86	0.57
1:B:42:LYS:H	5:B:531:DTT:H42	1.69	0.57
1:A:59:ALA:O	1:A:218:SER:HB3	2.05	0.57
1:A:405:ASP:HB2	1:A:408:ARG:HD3	1.87	0.56
1:A:59:ALA:O	1:A:218:SER:CB	2.54	0.56
1:B:398:ARG:NH1	1:B:477:VAL:HG22	2.21	0.56
1:B:22:LYS:NZ	1:B:116:GLU:OE2	2.32	0.55
1:B:409:SER:HA	4:B:526:GOL:H12	1.88	0.54
1:A:50:GLN:OE1	1:A:50:GLN:CA	2.54	0.54
1:B:398:ARG:HH12	1:B:477:VAL:HG22	1.73	0.54
1:B:471:LYS:HD2	1:B:482:ALA:HB2	1.90	0.54
1:B:421:GLY:O	4:B:525:GOL:H31	2.07	0.54
1:B:52:PRO:O	1:B:53:ASP:C	2.46	0.54
1:B:400:VAL:HG13	3:B:524:CL:CL	2.45	0.53
1:B:297:GLU:OE1	1:B:330:LYS:HE3	2.08	0.52
1:B:147:VAL:HG23	1:B:148:THR:HG23	1.92	0.52
1:A:398:ARG:NH1	1:A:403:THR:HG21	2.25	0.52
1:B:299:ASP:O	1:B:299:ASP:CG	2.46	0.52
1:A:299:ASP:HB2	1:A:335:TYR:CE1	2.45	0.52
1:A:484:THR:HG21	1:B:477:VAL:CG2	2.41	0.51
1:B:42:LYS:H	5:B:531:DTT:C4	2.23	0.51
1:B:330:LYS:HD2	1:B:335:TYR:OH	2.11	0.50
1:A:337:ASP:HA	7:A:647:HOH:O	2.11	0.50
1:B:416:LEU:HD23	4:B:528:GOL:H31	1.94	0.50
1:A:398:ARG:O	1:A:399:LYS:CB	2.54	0.50
1:A:339:GLU:OE1	1:A:341:ARG:NH2	2.35	0.49
1:A:29:PHE:HE2	1:B:19:CYS:HB2	1.78	0.48
1:A:471:LYS:HD2	1:A:482:ALA:HB2	1.95	0.48
1:B:303:LYS:CD	1:B:303:LYS:N	2.75	0.47
1:A:12:ILE:HB	1:A:48:LEU:HB3	1.96	0.47
1:B:42:LYS:CB	5:B:531:DTT:H42	2.40	0.47
1:A:486:ASP:HB2	1:A:487:PRO:CD	2.44	0.47
1:B:295:GLN:HB3	1:B:308:ARG:HB3	1.97	0.47
1:B:453:PHE:O	4:B:525:GOL:H2	2.15	0.46
1:A:401:THR:HG22	1:A:403:THR:H	1.80	0.46

Continued on next page...

Continued from previous page...

Atom-1	Atom-2	Interatomic distance (Å)	Clash overlap (Å)
1:A:271:ARG:HD2	1:A:284:ASN:HA	1.96	0.46
1:B:40:LEU:HD11	1:B:45:ILE:HD13	1.98	0.46
1:B:339:GLU:OE1	1:B:341:ARG:NH1	2.46	0.46
1:A:82:ARG:HA	1:A:82:ARG:HD3	1.80	0.45
1:A:88:ASP:HB2	2:A:501:BR:BR	2.71	0.45
1:A:426:LYS:HD3	1:A:430:GLY:HA2	1.98	0.45
1:B:88:ASP:HB2	2:B:502:BR:BR	2.72	0.44
1:A:104:GLN:HB2	1:A:111:TYR:CE1	2.52	0.44
1:B:431:LYS:NZ	1:B:446:ASP:OD1	2.50	0.44
1:A:422:ALA:HB1	1:A:450:ASP:HB3	1.98	0.44
1:B:71:ALA:O	1:B:78:VAL:HA	2.17	0.44
1:B:298:ILE:O	1:B:299:ASP:CB	2.66	0.44
6:B:533:EPE:H21	6:B:533:EPE:H102	1.62	0.44
1:B:344:ARG:CZ	4:B:530:GOL:H12	2.48	0.43
1:A:109:ARG:HA	1:A:109:ARG:HD3	1.78	0.43
1:A:217:ARG:O	1:A:217:ARG:HG3	2.19	0.43
1:A:398:ARG:HG3	1:A:405:ASP:OD2	2.19	0.43
1:B:42:LYS:CB	5:B:531:DTT:H11	2.46	0.43
1:B:343:ARG:NH2	1:B:450:ASP:OD2	2.48	0.43
1:A:394:PHE:CD1	1:A:411:TYR:HB3	2.54	0.43
1:B:377:LEU:HD23	1:B:377:LEU:C	2.40	0.42
1:B:486:ASP:OD1	1:B:488:ALA:N	2.53	0.42
1:A:298:ILE:O	7:A:777:HOH:O	2.22	0.41
1:B:13:GLN:OE1	1:B:389:ARG:NH2	2.50	0.41
1:A:207:GLU:HB2	1:A:208:PRO:CD	2.50	0.41
1:B:43:LYS:HA	1:B:65:HIS:CD2	2.55	0.41
1:A:110:ARG:HD3	1:A:122:PHE:HA	2.02	0.41
1:B:207:GLU:HB2	1:B:208:PRO:HD2	2.03	0.41
1:A:29:PHE:CE2	1:B:19:CYS:HB2	2.55	0.41
1:B:201:ARG:NH2	2:B:504:BR:BR	3.01	0.41
1:A:377:LEU:C	1:A:377:LEU:HD23	2.42	0.40
1:A:197:ARG:HE	1:A:199:ASP:CG	2.25	0.40
1:B:156:SER:HB3	1:B:159:PRO:O	2.21	0.40
1:B:248:VAL:HG22	3:B:516:CL:CL	2.58	0.40
1:A:197:ARG:NH2	1:A:201:ARG:HD2	2.36	0.40

There are no symmetry-related clashes.

5.3 Torsion angles (i)

5.3.1 Protein backbone (i)

In the following table, the Percentiles column shows the percent Ramachandran outliers of the chain as a percentile score with respect to all X-ray entries followed by that with respect to entries of similar resolution.

The Analysed column shows the number of residues for which the backbone conformation was analysed, and the total number of residues.

Mol	Chain	Analysed	Favoured	Allowed	Outliers	Percentiles	
1	A	469/493 (95%)	445 (95%)	22 (5%)	2 (0%)	34	54
1	B	479/493 (97%)	456 (95%)	23 (5%)	0	100	100
All	All	948/986 (96%)	901 (95%)	45 (5%)	2 (0%)	47	68

All (2) Ramachandran outliers are listed below:

Mol	Chain	Res	Type
1	A	51	PRO
1	A	399	LYS

5.3.2 Protein sidechains (i)

In the following table, the Percentiles column shows the percent sidechain outliers of the chain as a percentile score with respect to all X-ray entries followed by that with respect to entries of similar resolution.

The Analysed column shows the number of residues for which the sidechain conformation was analysed, and the total number of residues.

Mol	Chain	Analysed	Rotameric	Outliers	Percentiles	
1	A	391/401 (98%)	388 (99%)	3 (1%)	81	93
1	B	396/401 (99%)	391 (99%)	5 (1%)	69	87
All	All	787/802 (98%)	779 (99%)	8 (1%)	76	90

All (8) residues with a non-rotameric sidechain are listed below:

Mol	Chain	Res	Type
1	A	138	MET
1	A	171	TRP
1	A	183	ASP
1	B	138	MET

Continued on next page...

Continued from previous page...

Mol	Chain	Res	Type
1	B	171	TRP
1	B	237	SER
1	B	400	VAL
1	B	459	ASN

Sometimes sidechains can be flipped to improve hydrogen bonding and reduce clashes. All (2) such sidechains are listed below:

Mol	Chain	Res	Type
1	A	193	HIS
1	A	198	HIS

5.3.3 RNA (i)

There are no RNA molecules in this entry.

5.4 Non-standard residues in protein, DNA, RNA chains (i)

There are no non-standard protein/DNA/RNA residues in this entry.

5.5 Carbohydrates (i)

There are no monosaccharides in this entry.

5.6 Ligand geometry (i)

Of 50 ligands modelled in this entry, 36 are monoatomic - leaving 14 for Mogul analysis.

In the following table, the Counts columns list the number of bonds (or angles) for which Mogul statistics could be retrieved, the number of bonds (or angles) that are observed in the model and the number of bonds (or angles) that are defined in the Chemical Component Dictionary. The Link column lists molecule types, if any, to which the group is linked. The Z score for a bond length (or angle) is the number of standard deviations the observed value is removed from the expected value. A bond length (or angle) with $|Z| > 2$ is considered an outlier worth inspection. RMSZ is the root-mean-square of all Z scores of the bond lengths (or angles).

Mol	Type	Chain	Res	Link	Bond lengths			Bond angles		
					Counts	RMSZ	$\#\|Z\| > 2$	Counts	RMSZ	$\#\|Z\| > 2$
5	DTT	B	531	-	7,7,7	0.52	0	4,8,8	0.87	0
4	GOL	A	516	-	5,5,5	0.19	0	5,5,5	0.61	0
4	GOL	A	515	-	5,5,5	0.33	0	5,5,5	0.41	0

Mol	Type	Chain	Res	Link	Bond lengths			Bond angles		
					Counts	RMSZ	$\#\|Z\| > 2$	Counts	RMSZ	$\#\|Z\| > 2$
4	GOL	B	526	-	5,5,5	0.45	0	5,5,5	0.48	0
4	GOL	B	527	-	5,5,5	0.34	0	5,5,5	0.19	0
5	DTT	A	517	-	7,7,7	0.36	0	4,8,8	1.58	1 (25%)
4	GOL	B	529	-	5,5,5	0.24	0	5,5,5	0.33	0
4	GOL	B	530	-	5,5,5	0.27	0	5,5,5	0.23	0
4	GOL	B	525	-	5,5,5	0.28	0	5,5,5	0.46	0
5	DTT	B	532	-	7,7,7	0.49	0	4,8,8	0.95	0
4	GOL	A	514	-	5,5,5	0.26	0	5,5,5	0.42	0
4	GOL	A	513	-	5,5,5	0.18	0	5,5,5	0.58	0
6	EPE	B	533	-	15,15,15	2.23	2 (13%)	18,20,20	1.47	4 (22%)
4	GOL	B	528	-	5,5,5	0.25	0	5,5,5	0.68	0

In the following table, the Chirals column lists the number of chiral outliers, the number of chiral centers analysed, the number of these observed in the model and the number defined in the Chemical Component Dictionary. Similar counts are reported in the Torsion and Rings columns. '-' means no outliers of that kind were identified.

Mol	Type	Chain	Res	Link	Chirals	Torsions	Rings
5	DTT	B	531	-	-	4/8/8/8	-
4	GOL	A	516	-	-	3/4/4/4	-
4	GOL	A	515	-	-	4/4/4/4	-
4	GOL	B	526	-	-	2/4/4/4	-
4	GOL	B	527	-	-	4/4/4/4	-
5	DTT	A	517	-	-	3/8/8/8	-
4	GOL	B	529	-	-	2/4/4/4	-
4	GOL	B	530	-	-	4/4/4/4	-
4	GOL	B	525	-	-	0/4/4/4	-
5	DTT	B	532	-	-	2/8/8/8	-
4	GOL	A	514	-	-	0/4/4/4	-
4	GOL	A	513	-	-	0/4/4/4	-
6	EPE	B	533	-	-	7/9/19/19	0/1/1/1
4	GOL	B	528	-	-	4/4/4/4	-

All (2) bond length outliers are listed below:

Mol	Chain	Res	Type	Atoms	Z	Observed(Å)	Ideal(Å)
6	B	533	EPE	C10-S	-7.18	1.67	1.77
6	B	533	EPE	O3S-S	4.67	1.64	1.47

All (5) bond angle outliers are listed below:

Mol	Chain	Res	Type	Atoms	Z	Observed(^{o})	Ideal(^{o})
6	B	533	EPE	O1S-S-C10	2.82	110.31	106.92
5	A	517	DTT	C2-C1-S1	-2.63	106.82	114.47
6	B	533	EPE	C5-N4-C3	2.59	114.66	108.83
6	B	533	EPE	C8-C7-N4	-2.31	105.09	113.40
6	B	533	EPE	O3S-S-C10	2.16	109.26	105.77

There are no chirality outliers.

All (39) torsion outliers are listed below:

Mol	Chain	Res	Type	Atoms
4	A	515	GOL	O1-C1-C2-C3
4	A	515	GOL	C1-C2-C3-O3
4	A	516	GOL	O2-C2-C3-O3
4	B	526	GOL	O1-C1-C2-C3
4	B	527	GOL	O1-C1-C2-O2
4	B	527	GOL	O1-C1-C2-C3
4	B	527	GOL	C1-C2-C3-O3
4	B	527	GOL	O2-C2-C3-O3
4	B	528	GOL	O1-C1-C2-C3
4	B	529	GOL	O1-C1-C2-C3
4	B	530	GOL	O1-C1-C2-O2
4	B	530	GOL	O1-C1-C2-C3
4	B	530	GOL	C1-C2-C3-O3
5	A	517	DTT	C2-C3-C4-S4
5	A	517	DTT	O3-C3-C4-S4
5	B	531	DTT	S1-C1-C2-O2
5	B	531	DTT	S1-C1-C2-C3
5	B	531	DTT	C1-C2-C3-C4
5	B	532	DTT	C2-C3-C4-S4
5	B	532	DTT	O3-C3-C4-S4
6	B	533	EPE	C10-C9-N1-C2
6	B	533	EPE	C10-C9-N1-C6
6	B	533	EPE	N4-C7-C8-O8
4	A	516	GOL	C1-C2-C3-O3
4	B	528	GOL	C1-C2-C3-O3
4	A	515	GOL	O1-C1-C2-O2
4	B	526	GOL	O1-C1-C2-O2
4	B	528	GOL	O1-C1-C2-O2
4	B	528	GOL	O2-C2-C3-O3
4	B	529	GOL	O1-C1-C2-O2
4	B	530	GOL	O2-C2-C3-O3

Continued on next page...

Continued from previous page...

Mol	Chain	Res	Type	Atoms
5	B	531	DTT	O2-C2-C3-O3
6	B	533	EPE	S-C10-C9-N1
4	A	515	GOL	O2-C2-C3-O3
6	B	533	EPE	C8-C7-N4-C5
6	B	533	EPE	C8-C7-N4-C3
5	A	517	DTT	S1-C1-C2-O2
4	A	516	GOL	O1-C1-C2-C3
6	B	533	EPE	C9-C10-S-O2S

There are no ring outliers.

7 monomers are involved in 14 short contacts:

Mol	Chain	Res	Type	Clashes	Symm-Clashes
5	B	531	DTT	7	0
4	A	515	GOL	1	0
4	B	526	GOL	1	0
4	B	530	GOL	1	0
4	B	525	GOL	2	0
6	B	533	EPE	1	0
4	B	528	GOL	1	0

5.7 Other polymers (i)

There are no such residues in this entry.

5.8 Polymer linkage issues (i)

There are no chain breaks in this entry.

6 Fit of model and data (i)

6.1 Protein, DNA and RNA chains (i)

In the following table, the column labelled '#RSRZ> 2' contains the number (and percentage) of RSRZ outliers, followed by percent RSRZ outliers for the chain as percentile scores relative to all X-ray entries and entries of similar resolution. The OWAB column contains the minimum, median, 95th percentile and maximum values of the occupancy-weighted average B-factor per residue. The column labelled 'Q< 0.9' lists the number of (and percentage) of residues with an average occupancy less than 0.9.

Mol	Chain	Analysed	<RSRZ>	#RSRZ>2			OWAB(Å^2)	Q<0.9
1	A	477/493 (96%)	0.33	34 (7%)	16	16	25, 38, 57, 76	2 (0%)
1	B	483/493 (97%)	0.28	35 (7%)	15	16	24, 37, 60, 77	1 (0%)
All	All	960/986 (97%)	0.31	69 (7%)	15	16	24, 38, 59, 77	3 (0%)

All (69) RSRZ outliers are listed below:

Mol	Chain	Res	Type	RSRZ
1	A	400	VAL	8.9
1	B	359	LYS	5.4
1	A	359	LYS	5.2
1	A	159	PRO	5.1
1	A	401	THR	4.8
1	B	360	ASN	4.5
1	B	321	GLY	4.4
1	B	366	SER	4.0
1	A	52	PRO	3.7
1	A	30	GLY	3.7
1	B	236	PRO	3.6
1	A	32	LYS	3.5
1	B	350	SER	3.4
1	A	31	PHE	3.4
1	A	398	ARG	3.4
1	A	236	PRO	3.3
1	A	84	VAL	3.3
1	A	160	ALA	3.2
1	B	458	TYR	3.2
1	A	475	ALA	3.2
1	B	353	LYS	3.2
1	A	360	ASN	3.1
1	A	399	LYS	3.1
1	A	183	ASP	3.1

Continued on next page...

Continued from previous page...

Mol	Chain	Res	Type	RSRZ
1	B	8	GLU	3.0
1	B	329	SER	3.0
1	B	365	ALA	2.9
1	A	352	GLY	2.9
1	B	358	LYS	2.8
1	B	84	VAL	2.8
1	B	235	GLY	2.7
1	B	367	VAL	2.7
1	B	354	PHE	2.7
1	A	28	ALA	2.7
1	A	237	SER	2.6
1	A	201	ARG	2.5
1	A	474	HIS	2.5
1	B	362	GLN	2.5
1	B	271	ARG	2.5
1	A	244	LYS	2.5
1	A	243	GLY	2.5
1	A	270	GLU	2.4
1	A	83	GLU	2.4
1	B	356	THR	2.4
1	A	7	ALA	2.4
1	B	246	THR	2.4
1	B	205	ARG	2.3
1	B	352	GLY	2.3
1	A	439	SER	2.3
1	B	486	ASP	2.3
1	A	8	GLU	2.3
1	B	214	LEU	2.3
1	B	319	ALA	2.2
1	A	321	GLY	2.2
1	A	51	PRO	2.2
1	B	330	LYS	2.2
1	B	247	LYS	2.2
1	B	320	THR	2.2
1	A	286	ASP	2.2
1	B	437	SER	2.2
1	B	299	ASP	2.1
1	B	270	GLU	2.1
1	A	229	ARG	2.1
1	A	67	GLY	2.1
1	B	474	HIS	2.1
1	B	116	GLU	2.1

Continued on next page...

Continued from previous page...

Mol	Chain	Res	Type	RSRZ
1	A	50	GLN	2.0
1	B	399	LYS	2.0
1	B	381	ILE	2.0

6.2 Non-standard residues in protein, DNA, RNA chains (i)

There are no non-standard protein/DNA/RNA residues in this entry.

6.3 Carbohydrates (i)

There are no monosaccharides in this entry.

6.4 Ligands (i)

In the following table, the Atoms column lists the number of modelled atoms in the group and the number defined in the chemical component dictionary. The B-factors column lists the minimum, median, 95th percentile and maximum values of B factors of atoms in the group. The column labelled 'Q< 0.9' lists the number of atoms with occupancy less than 0.9.

Mol	Type	Chain	Res	Atoms	RSCC	RSR	B-factors(Å^2)	Q<0.9
3	CL	A	512	1/1	0.69	0.12	61,61,61,61	0
4	GOL	B	527	6/6	0.76	0.28	55,58,60,61	0
4	GOL	A	516	6/6	0.80	0.19	58,58,60,60	0
5	DTT	B	532	8/8	0.80	0.25	63,65,68,69	0
6	EPE	B	533	15/15	0.80	0.25	72,74,78,80	0
5	DTT	B	531	8/8	0.83	0.36	62,66,67,69	0
4	GOL	B	530	6/6	0.85	0.33	47,49,50,53	0
4	GOL	B	529	6/6	0.85	0.23	47,50,54,54	0
4	GOL	B	528	6/6	0.86	0.30	37,39,40,41	0
5	DTT	A	517	8/8	0.89	0.24	65,68,73,74	0
4	GOL	B	526	6/6	0.89	0.17	42,44,46,46	0
3	CL	A	509	1/1	0.90	0.09	59,59,59,59	0
3	CL	B	520	1/1	0.90	0.18	56,56,56,56	0
3	CL	B	513	1/1	0.91	0.07	49,49,49,49	0
4	GOL	A	513	6/6	0.91	0.22	37,40,42,45	0
3	CL	B	516	1/1	0.91	0.08	51,51,51,51	0
4	GOL	B	525	6/6	0.92	0.17	27,31,33,34	0
3	CL	B	519	1/1	0.92	0.06	45,45,45,45	0
3	CL	B	515	1/1	0.93	0.10	43,43,43,43	0
3	CL	A	507	1/1	0.93	0.07	47,47,47,47	0

Continued on next page...

Continued from previous page...

Mol	Type	Chain	Res	Atoms	RSCC	RSR	B-factors(Å^2)	Q<0.9
3	CL	B	523	1/1	0.94	0.07	57,57,57,57	0
3	CL	A	508	1/1	0.94	0.10	52,52,52,52	0
4	GOL	A	514	6/6	0.94	0.14	31,35,36,36	0
4	GOL	A	515	6/6	0.94	0.20	45,47,48,49	0
3	CL	B	521	1/1	0.94	0.09	53,53,53,53	0
3	CL	B	511	1/1	0.95	0.07	46,46,46,46	0
3	CL	B	518	1/1	0.95	0.07	53,53,53,53	0
3	CL	A	504	1/1	0.95	0.16	44,44,44,44	0
3	CL	B	514	1/1	0.95	0.08	49,49,49,49	0
3	CL	A	505	1/1	0.95	0.07	45,45,45,45	0
3	CL	A	506	1/1	0.96	0.10	39,39,39,39	0
3	CL	A	510	1/1	0.96	0.05	57,57,57,57	0
3	CL	A	511	1/1	0.96	0.16	51,51,51,51	0
3	CL	B	517	1/1	0.96	0.07	45,45,45,45	0
3	CL	B	522	1/1	0.96	0.12	48,48,48,48	0
2	BR	A	501	1/1	0.97	0.04	52,52,52,52	0
3	CL	B	512	1/1	0.97	0.07	50,50,50,50	0
3	CL	B	510	1/1	0.97	0.20	30,30,30,30	0
3	CL	B	524	1/1	0.98	0.10	48,48,48,48	0
3	CL	B	508	1/1	0.98	0.14	33,33,33,33	0
3	CL	B	509	1/1	0.98	0.13	33,33,33,33	0
3	CL	A	503	1/1	0.98	0.10	30,30,30,30	0
2	BR	B	504	1/1	0.98	0.06	48,48,48,48	0
2	BR	B	503	1/1	0.99	0.03	49,49,49,49	0
2	BR	B	501	1/1	0.99	0.04	43,43,43,43	0
2	BR	B	505	1/1	0.99	0.06	48,48,48,48	0
3	CL	B	507	1/1	0.99	0.11	32,32,32,32	0
2	BR	B	506	1/1	0.99	0.05	60,60,60,60	0
3	CL	A	502	1/1	0.99	0.13	38,38,38,38	0
2	BR	B	502	1/1	0.99	0.04	39,39,39,39	0

6.5 Other polymers (i)

There are no such residues in this entry.