Full wwPDB X-ray Structure Validation Report (i)

May 29, 2020 – 07:47 am BST

PDB ID	:	5F3T
Title	:	Dengue serotype 3 RNA-dependent RNA polymerase bound to JF-31-MG46
Authors	:	Noble, C.G.
Deposited on	:	2015-12-03
Resolution	:	2.05 Å(reported)

This is a Full wwPDB X-ray Structure Validation Report for a publicly released PDB entry.

We welcome your comments at *validation@mail.wwpdb.org*
A user guide is available at
https://www.wwpdb.org/validation/2017/XrayValidationReportHelp
with specific help available everywhere you see the (i) symbol.

The following versions of software and data (see references (1)) were used in the production of this report:

MolProbity	:	4.02b-467
Mogul	:	1.8.5 (274361), CSD as541be (2020)
Xtriage (Phenix)	:	1.13
EDS	:	2.11
Percentile statistics	:	20191225.v01 (using entries in the PDB archive December 25th 2019)
Refmac	:	5.8.0158
CCP4	:	7.0.044 (Gargrove)
Ideal geometry (proteins)	:	Engh & Huber (2001)
Ideal geometry (DNA, RNA)	:	Parkinson et al. (1996)
Validation Pipeline (wwPDB-VP)	:	2.11

1 Overall quality at a glance (i)

The following experimental techniques were used to determine the structure:
X-RAY DIFFRACTION

The reported resolution of this entry is 2.05 Å.

Percentile scores (ranging between 0-100) for global validation metrics of the entry are shown in the following graphic. The table shows the number of entries on which the scores are based.

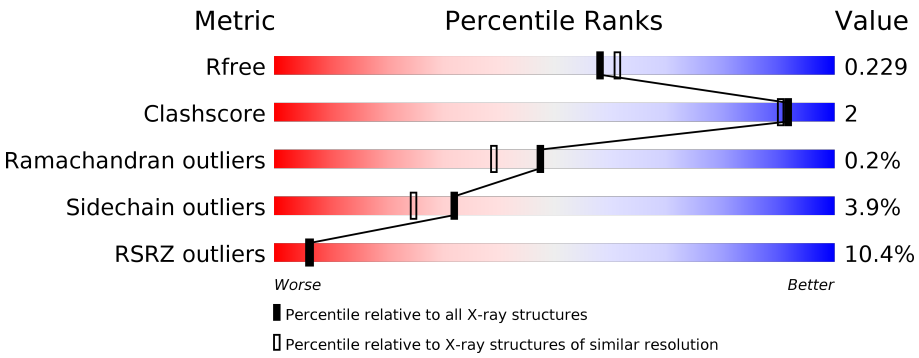

Metric	Whole archive (#Entries)	Similar resolution (#Entries, resolution range(Å))
R_{free}	130704	1692 (2.04-2.04)
Clashscore	141614	1773 (2.04-2.04)
Ramachandran outliers	138981	1752 (2.04-2.04)
Sidechain outliers	138945	1752 (2.04-2.04)
RSRZ outliers	127900	1672 (2.04-2.04)

The table below summarises the geometric issues observed across the polymeric chains and their fit to the electron density. The red, orange, yellow and green segments on the lower bar indicate the fraction of residues that contain outliers for >=3, 2, 1 and 0 types of geometric quality criteria respectively. A grey segment represents the fraction of residues that are not modelled. The numeric value for each fraction is indicated below the corresponding segment, with a dot representing fractions <=5% The upper red bar (where present) indicates the fraction of residues that have poor fit to the electron density. The numeric value is given above the bar.

Mol	Chain	Length	Quality of chain
1	A	635	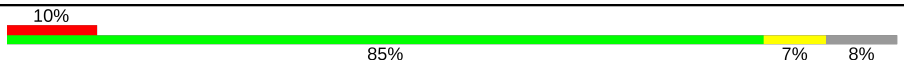

2 Entry composition (i)

There are 4 unique types of molecules in this entry. The entry contains 5175 atoms, of which 0 are hydrogens and 0 are deuteriums.

In the tables below, the ZeroOcc column contains the number of atoms modelled with zero occupancy, the AltConf column contains the number of residues with at least one atom in alternate conformation and the Trace column contains the number of residues modelled with at most 2 atoms.

- Molecule 1 is a protein called RNA-DEPENDENT RNA POLYMERASE.

Mol	Chain	Residues	Atoms					ZeroOcc	AltConf	Trace
			Total	C	N	O	S			
1	A	585	4780	3020	856	873	31	0	3	0

There are 7 discrepancies between the modelled and reference sequences:

Chain	Residue	Modelled	Actual	Comment	Reference
A	266	GLY	-	expression tag	UNP Q6DLV0
A	267	SER	-	expression tag	UNP Q6DLV0
A	268	HIS	-	expression tag	UNP Q6DLV0
A	269	MET	-	expression tag	UNP Q6DLV0
A	270	LEU	-	expression tag	UNP Q6DLV0
A	271	ASP	-	expression tag	UNP Q6DLV0
A	374	GLU	GLY	variant	UNP Q6DLV0

- Molecule 2 is ZINC ION (three-letter code: ZN) (formula: Zn).

Mol	Chain	Residues	Atoms		ZeroOcc	AltConf
			Total	Zn		
2	A	2	2	2	0	0

- Molecule 3 is 2-(4-methoxy-3-phenyl-phenyl)ethanoic acid (three-letter code: 5UH) (formula: $C_{15}H_{14}O_3$).

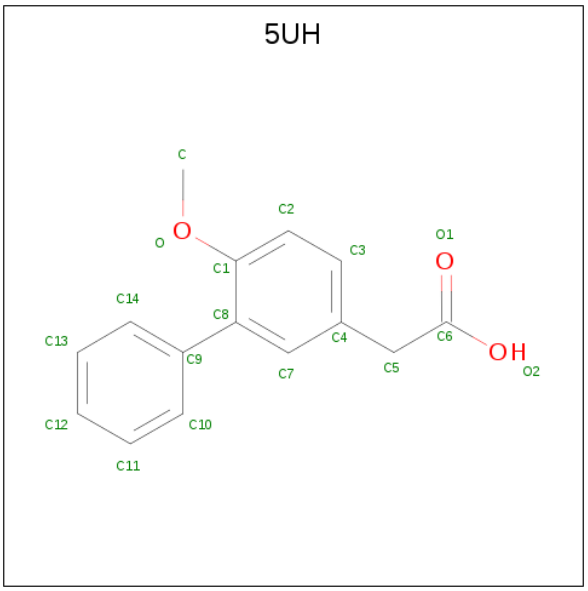

Mol	Chain	Residues	Atoms			ZeroOcc	AltConf
			Total	C	O		
3	A	1	18	15	3	0	0

- Molecule 4 is water.

Mol	Chain	Residues	Atoms		ZeroOcc	AltConf
			Total	O		
4	A	375	375	375	0	0

3 Residue-property plots (i)

These plots are drawn for all protein, RNA and DNA chains in the entry. The first graphic for a chain summarises the proportions of the various outlier classes displayed in the second graphic. The second graphic shows the sequence view annotated by issues in geometry and electron density. Residues are color-coded according to the number of geometric quality criteria for which they contain at least one outlier: green = 0, yellow = 1, orange = 2 and red = 3 or more. A red dot above a residue indicates a poor fit to the electron density (RSRZ > 2). Stretches of 2 or more consecutive residues without any outlier are shown as a green connector. Residues present in the sample, but not in the model, are shown in grey.

- Molecule 1: RNA-DEPENDENT RNA POLYMERASE

Chain A:

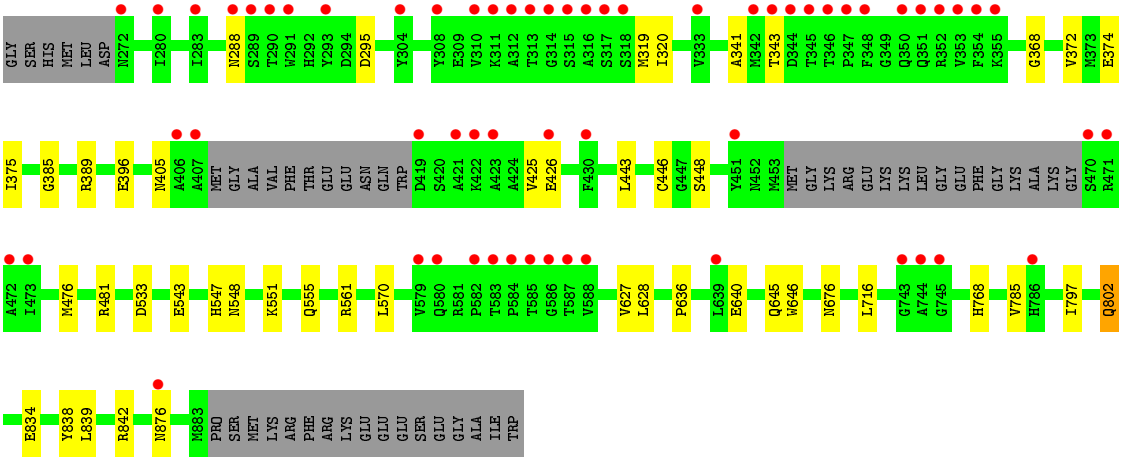

4 Data and refinement statistics (i)

Property	Value	Source
Space group	C 2 2 21	Depositor
Cell constants a, b, c, α, β, γ	161.58Å 177.09Å 57.88Å 90.00° 90.00° 90.00°	Depositor
Resolution (Å)	40.40 – 2.05 40.40 – 2.05	Depositor EDS
% Data completeness (in resolution range)	99.4 (40.40-2.05) 99.4 (40.40-2.05)	Depositor EDS
R_{merge}	(Not available)	Depositor
R_{sym}	0.13	Depositor
$< I/\sigma(I) >$ [1]	1.99 (at 2.05Å)	Xtriage
Refinement program	BUSTER-TNT BUSTER 2.11.5	Depositor
R, R_{free}	0.186 , 0.220 0.195 , 0.229	Depositor DCC
R_{free} test set	2664 reflections (5.10%)	wwPDB-VP
Wilson B-factor (Å^2)	29.1	Xtriage
Anisotropy	0.641	Xtriage
Bulk solvent k_{sol}(e/Å^3), B_{sol}(Å^2)	0.35 , 54.9	EDS
L-test for twinning[2]	$< \|L\| > = 0.48$, $< L^2 > = 0.31$	Xtriage
Estimated twinning fraction	No twinning to report.	Xtriage
F_o,F_c correlation	0.96	EDS
Total number of atoms	5175	wwPDB-VP
Average B, all atoms (Å^2)	41.0	wwPDB-VP

Xtriage's analysis on translational NCS is as follows: *The largest off-origin peak in the Patterson function is 4.79% of the height of the origin peak. No significant pseudotranslation is detected.*

[1] Intensities estimated from amplitudes.

[2] Theoretical values of $< |L| >$, $< L^2 >$ for acentric reflections are 0.5, 0.333 respectively for untwinned datasets, and 0.375, 0.2 for perfectly twinned datasets.

5 Model quality (i)

5.1 Standard geometry (i)

Bond lengths and bond angles in the following residue types are not validated in this section: ZN, 5UH

The Z score for a bond length (or angle) is the number of standard deviations the observed value is removed from the expected value. A bond length (or angle) with $|Z| > 5$ is considered an outlier worth inspection. RMSZ is the root-mean-square of all Z scores of the bond lengths (or angles).

Mol	Chain	Bond lengths		Bond angles	
		RMSZ	$\#\|Z\| >5$	RMSZ	$\#\|Z\| >5$
1	A	0.46	0/4910	0.62	0/6650

There are no bond length outliers.

There are no bond angle outliers.

There are no chirality outliers.

There are no planarity outliers.

5.2 Too-close contacts (i)

In the following table, the Non-H and H(model) columns list the number of non-hydrogen atoms and hydrogen atoms in the chain respectively. The H(added) column lists the number of hydrogen atoms added and optimized by MolProbity. The Clashes column lists the number of clashes within the asymmetric unit, whereas Symm-Clashes lists symmetry related clashes.

Mol	Chain	Non-H	H(model)	H(added)	Clashes	Symm-Clashes
1	A	4780	0	4678	15	0
2	A	2	0	0	0	0
3	A	18	0	0	0	0
4	A	375	0	0	0	0
All	All	5175	0	4678	15	0

The all-atom clashscore is defined as the number of clashes found per 1000 atoms (including hydrogen atoms). The all-atom clashscore for this structure is 2.

All (15) close contacts within the same asymmetric unit are listed below, sorted by their clash magnitude.

Atom-1	Atom-2	Interatomic distance (Å)	Clash overlap (Å)
1:A:716:LEU:HD21	1:A:839:LEU:HD23	1.71	0.72
1:A:802:GLN:H	1:A:802:GLN:HE21	1.38	0.71
1:A:372:VAL:HG11	1:A:628:LEU:HD11	1.79	0.65
1:A:385:GLY:HA3	1:A:555:GLN:HE22	1.61	0.65
1:A:375:ILE:HD11	1:A:640:GLU:HG2	1.79	0.65
1:A:320:ILE:HD11	1:A:341:ALA:HB1	1.92	0.51
1:A:548:ASN:HD22	1:A:551:LYS:HE2	1.78	0.47
1:A:368:GLY:O	1:A:372:VAL:HG23	2.16	0.46
1:A:627:VAL:HG21	1:A:646:TRP:CD1	2.52	0.45
1:A:448:SER:HB2	1:A:476:MET:HG2	2.00	0.44
1:A:374:GLU:HG3	1:A:551:LYS:HE3	2.03	0.41
1:A:543:GLU:O	1:A:547[A]:HIS:HD2	2.04	0.41
1:A:768:HIS:HA	1:A:838:TYR:HA	2.02	0.41
1:A:446:CYS:HB2	1:A:570:LEU:HD13	2.03	0.41
1:A:396[A]:GLU:H	1:A:396[A]:GLU:CD	2.25	0.40

There are no symmetry-related clashes.

5.3 Torsion angles (i)

5.3.1 Protein backbone (i)

In the following table, the Percentiles column shows the percent Ramachandran outliers of the chain as a percentile score with respect to all X-ray entries followed by that with respect to entries of similar resolution.

The Analysed column shows the number of residues for which the backbone conformation was analysed, and the total number of residues.

Mol	Chain	Analysed	Favoured	Allowed	Outliers	Percentiles
1	A	582/635 (92%)	564 (97%)	17 (3%)	1 (0%)	47 39

All (1) Ramachandran outliers are listed below:

Mol	Chain	Res	Type
1	A	343	THR

5.3.2 Protein sidechains (i)

In the following table, the Percentiles column shows the percent sidechain outliers of the chain as a percentile score with respect to all X-ray entries followed by that with respect to entries of similar

resolution.

The Analysed column shows the number of residues for which the sidechain conformation was analysed, and the total number of residues.

Mol	Chain	Analysed	Rotameric	Outliers	Percentiles
1	A	513/552 (93%)	493 (96%)	20 (4%)	32 25

All (20) residues with a non-rotameric sidechain are listed below:

Mol	Chain	Res	Type
1	A	288	ASN
1	A	295	ASP
1	A	319	MET
1	A	389	ARG
1	A	405	ASN
1	A	425	VAL
1	A	426	GLU
1	A	443	LEU
1	A	481	ARG
1	A	533	ASP
1	A	561	ARG
1	A	636	PRO
1	A	645	GLN
1	A	676	ASN
1	A	785	VAL
1	A	797	ILE
1	A	802	GLN
1	A	834	GLU
1	A	842	ARG
1	A	876	ASN

Some sidechains can be flipped to improve hydrogen bonding and reduce clashes. All (14) such sidechains are listed below:

Mol	Chain	Res	Type
1	A	297	ASN
1	A	339	GLN
1	A	350	GLN
1	A	548	ASN
1	A	555	GLN
1	A	562	GLN
1	A	621	GLN
1	A	693	GLN
1	A	704	GLN

Continued on next page...

Continued from previous page...

Mol	Chain	Res	Type
1	A	760	GLN
1	A	768	HIS
1	A	802	GLN
1	A	835	ASN
1	A	869	GLN

5.3.3 RNA (i)

There are no RNA molecules in this entry.

5.4 Non-standard residues in protein, DNA, RNA chains (i)

There are no non-standard protein/DNA/RNA residues in this entry.

5.5 Carbohydrates (i)

There are no carbohydrates in this entry.

5.6 Ligand geometry (i)

Of 3 ligands modelled in this entry, 2 are monoatomic - leaving 1 for Mogul analysis.

In the following table, the Counts columns list the number of bonds (or angles) for which Mogul statistics could be retrieved, the number of bonds (or angles) that are observed in the model and the number of bonds (or angles) that are defined in the Chemical Component Dictionary. The Link column lists molecule types, if any, to which the group is linked. The Z score for a bond length (or angle) is the number of standard deviations the observed value is removed from the expected value. A bond length (or angle) with $|Z| > 2$ is considered an outlier worth inspection. RMSZ is the root-mean-square of all Z scores of the bond lengths (or angles).

Mol	Type	Chain	Res	Link	Bond lengths			Bond angles		
					Counts	RMSZ	$\#\|Z\| > 2$	Counts	RMSZ	$\#\|Z\| > 2$
3	5UH	A	1003	-	16,19,19	1.29	1 (6%)	21,25,25	1.09	2 (9%)

In the following table, the Chirals column lists the number of chiral outliers, the number of chiral centers analysed, the number of these observed in the model and the number defined in the Chemical Component Dictionary. Similar counts are reported in the Torsion and Rings columns. '-' means no outliers of that kind were identified.

Mol	Type	Chain	Res	Link	Chirals	Torsions	Rings
3	5UH	A	1003	-	-	0/8/10/10	0/2/2/2

All (1) bond length outliers are listed below:

Mol	Chain	Res	Type	Atoms	Z	Observed(Å)	Ideal(Å)
3	A	1003	5UH	C8-C1	4.47	1.50	1.40

All (2) bond angle outliers are listed below:

Mol	Chain	Res	Type	Atoms	Z	Observed(^{o})	Ideal(^{o})
3	A	1003	5UH	C-O-C1	2.76	121.70	117.53
3	A	1003	5UH	O-C1-C8	2.19	119.53	116.26

There are no chirality outliers.

There are no torsion outliers.

There are no ring outliers.

No monomer is involved in short contacts.

5.7 Other polymers (i)

There are no such residues in this entry.

5.8 Polymer linkage issues (i)

There are no chain breaks in this entry.

6 Fit of model and data (i)

6.1 Protein, DNA and RNA chains (i)

In the following table, the column labelled '#RSRZ> 2' contains the number (and percentage) of RSRZ outliers, followed by percent RSRZ outliers for the chain as percentile scores relative to all X-ray entries and entries of similar resolution. The OWAB column contains the minimum, median, 95th percentile and maximum values of the occupancy-weighted average B-factor per residue. The column labelled 'Q< 0.9' lists the number of (and percentage) of residues with an average occupancy less than 0.9.

Mol	Chain	Analysed	<RSRZ>	#RSRZ>2	OWAB(Å^2)	Q<0.9
1	A	585/635 (92%)	0.33	61 (10%) 6 6	19, 36, 82, 125	0

All (61) RSRZ outliers are listed below:

Mol	Chain	Res	Type	RSRZ
1	A	407	ALA	15.9
1	A	353	VAL	7.5
1	A	312	ALA	6.6
1	A	348	PHE	6.1
1	A	473	ILE	6.0
1	A	343	THR	5.8
1	A	406	ALA	5.6
1	A	347	PRO	5.2
1	A	344	ASP	4.5
1	A	346	THR	4.4
1	A	470	SER	4.1
1	A	290	THR	3.9
1	A	743	GLY	3.9
1	A	345	THR	3.9
1	A	352	ARG	3.7
1	A	584	PRO	3.6
1	A	293	TYR	3.6
1	A	582	PRO	3.6
1	A	316	ALA	3.6
1	A	314	GLY	3.5
1	A	315	SER	3.5
1	A	313	THR	3.4
1	A	419	ASP	3.4
1	A	333	VAL	3.4
1	A	586	GLY	3.4
1	A	311	LYS	3.3
1	A	318	SER	3.3

Continued on next page...

Continued from previous page...

Mol	Chain	Res	Type	RSRZ
1	A	471	ARG	3.2
1	A	583	THR	3.1
1	A	289	SER	3.0
1	A	588	VAL	3.0
1	A	587	THR	2.9
1	A	350	GLN	2.9
1	A	288	ASN	2.9
1	A	310	VAL	2.9
1	A	745	GLY	2.8
1	A	304	TYR	2.8
1	A	423	ALA	2.7
1	A	291	TRP	2.6
1	A	426	GLU	2.6
1	A	317	SER	2.5
1	A	421	ALA	2.5
1	A	472	ALA	2.5
1	A	355	LYS	2.5
1	A	280	ILE	2.4
1	A	283	ILE	2.4
1	A	579	VAL	2.4
1	A	351	GLN	2.4
1	A	786	HIS	2.3
1	A	585	THR	2.3
1	A	272	ASN	2.3
1	A	354	PHE	2.2
1	A	342	MET	2.1
1	A	308	TYR	2.1
1	A	744	ALA	2.1
1	A	876	ASN	2.1
1	A	580	GLN	2.0
1	A	639	LEU	2.0
1	A	430	PHE	2.0
1	A	451	TYR	2.0
1	A	422	LYS	2.0

6.2 Non-standard residues in protein, DNA, RNA chains (i)

There are no non-standard protein/DNA/RNA residues in this entry.

6.3 Carbohydrates (i)

There are no carbohydrates in this entry.

6.4 Ligands (i)

In the following table, the Atoms column lists the number of modelled atoms in the group and the number defined in the chemical component dictionary. The B-factors column lists the minimum, median, 95th percentile and maximum values of B factors of atoms in the group. The column labelled 'Q< 0.9' lists the number of atoms with occupancy less than 0.9.

Mol	Type	Chain	Res	Atoms	RSCC	RSR	B-factors(Å^2)	Q<0.9
3	5UH	A	1003	18/18	0.92	0.21	34,38,57,57	0
2	ZN	A	1002	1/1	0.99	0.08	39,39,39,39	0
2	ZN	A	1001	1/1	1.00	0.11	25,25,25,25	0

6.5 Other polymers (i)

There are no such residues in this entry.