Full wwPDB X-ray Structure Validation Report (i)

Oct 17, 2023 – 08:49 PM EDT

PDB ID	:	2DGM
Title	:	Crystal structure of Escherichia coli GadB in complex with iodide
Authors	:	Gruetter, M.G.; Capitani, G.; Gut, H.
Deposited on	:	2006-03-14
Resolution	:	1.95 Å(reported)

This is a Full wwPDB X-ray Structure Validation Report for a publicly released PDB entry.

We welcome your comments at *validation@mail.wwpdb.org*
A user guide is available at
https://www.wwpdb.org/validation/2017/XrayValidationReportHelp
with specific help available everywhere you see the (i) symbol.

The types of validation reports are described at
http://www.wwpdb.org/validation/2017/FAQs#types.

The following versions of software and data (see references (i)) were used in the production of this report:

MolProbity	:	4.02b-467
Mogul	:	1.8.5 (274361), CSD as541be (2020)
Xtriage (Phenix)	:	1.13
EDS	:	2.36
Percentile statistics	:	20191225.v01 (using entries in the PDB archive December 25th 2019)
Refmac	:	5.8.0158
CCP4	:	7.0.044 (Gargrove)
Ideal geometry (proteins)	:	Engh & Huber (2001)
Ideal geometry (DNA, RNA)	:	Parkinson et al. (1996)
Validation Pipeline (wwPDB-VP)	:	2.36

1 Overall quality at a glance (i)

The following experimental techniques were used to determine the structure:
X-RAY DIFFRACTION

The reported resolution of this entry is 1.95 Å.

Percentile scores (ranging between 0-100) for global validation metrics of the entry are shown in the following graphic. The table shows the number of entries on which the scores are based.

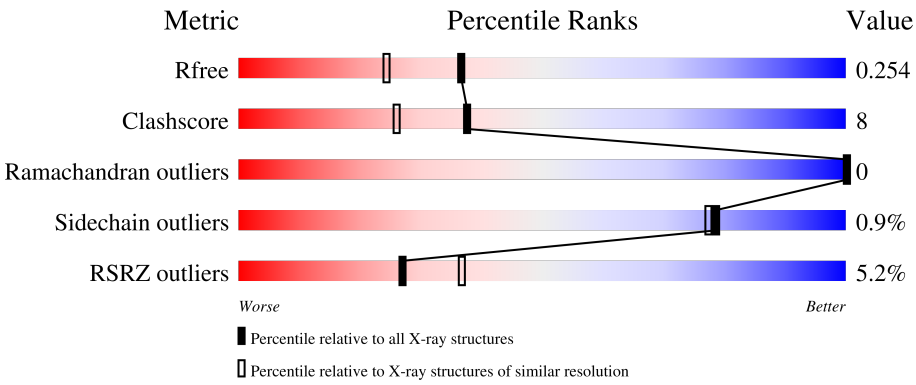

Metric	Whole archive (#Entries)	Similar resolution (#Entries, resolution range(Å))
R_{free}	130704	2580 (1.96-1.96)
Clashscore	141614	2705 (1.96-1.96)
Ramachandran outliers	138981	2678 (1.96-1.96)
Sidechain outliers	138945	2678 (1.96-1.96)
RSRZ outliers	127900	2539 (1.96-1.96)

The table below summarises the geometric issues observed across the polymeric chains and their fit to the electron density. The red, orange, yellow and green segments of the lower bar indicate the fraction of residues that contain outliers for >=3, 2, 1 and 0 types of geometric quality criteria respectively. A grey segment represents the fraction of residues that are not modelled. The numeric value for each fraction is indicated below the corresponding segment, with a dot representing fractions <=5% The upper red bar (where present) indicates the fraction of residues that have poor fit to the electron density. The numeric value is given above the bar.

Mol	Chain	Length	Quality of chain
1	A	466	4% 79% 17% • •
1	B	466	5% 79% 17% •
1	C	466	5% 79% 18% • •
1	D	466	7% 83% 14% •
1	E	466	5% 82% 15% •

Continued on next page...

Continued from previous page...

Mol	Chain	Length	Quality of chain
1	F	466	5% 76% 21%

The following table lists non-polymeric compounds, carbohydrate monomers and non-standard residues in protein, DNA, RNA chains that are outliers for geometric or electron-density-fit criteria:

Mol	Type	Chain	Res	Chirality	Geometry	Clashes	Electron density
2	IOD	A	2331	-	-	X	-
2	IOD	A	2355	-	-	X	-
2	IOD	B	2333	-	-	X	-
2	IOD	B	2338	-	-	X	-
2	IOD	C	2351	-	-	X	-
2	IOD	D	2352	-	-	X	-
2	IOD	E	2335	-	-	X	-
2	IOD	E	2353	-	-	X	-
2	IOD	F	2336	-	-	X	-

2 Entry composition (i)

There are 7 unique types of molecules in this entry. The entry contains 23729 atoms, of which 0 are hydrogens and 0 are deuteriums.

In the tables below, the ZeroOcc column contains the number of atoms modelled with zero occupancy, the AltConf column contains the number of residues with at least one atom in alternate conformation and the Trace column contains the number of residues modelled with at most 2 atoms.

- Molecule 1 is a protein called Glutamate decarboxylase beta.

Mol	Chain	Residues	Atoms					ZeroOcc	AltConf	Trace
			Total	C	N	O	S			
1	A	452	3604	2300	616	663	25	0	3	0
1	B	451	3591	2292	612	662	25	0	2	0
1	C	454	3614	2306	616	666	26	0	3	0
1	D	454	3621	2313	617	666	25	0	4	0
1	E	450	3585	2288	610	661	26	0	3	0
1	F	454	3619	2312	617	665	25	0	2	0

- Molecule 2 is IODIDE ION (three-letter code: IOD) (formula: I).

Mol	Chain	Residues	Atoms		ZeroOcc	AltConf
			Total	I		
2	A	6	6	6	0	0
2	B	6	6	6	0	0
2	C	4	4	4	0	0
2	D	6	6	6	0	0
2	E	5	5	5	0	0
2	F	5	5	5	0	0

- Molecule 3 is PYRIDOXAL-5'-PHOSPHATE (three-letter code: PLP) (formula: $C_8H_{10}NO_6P$).

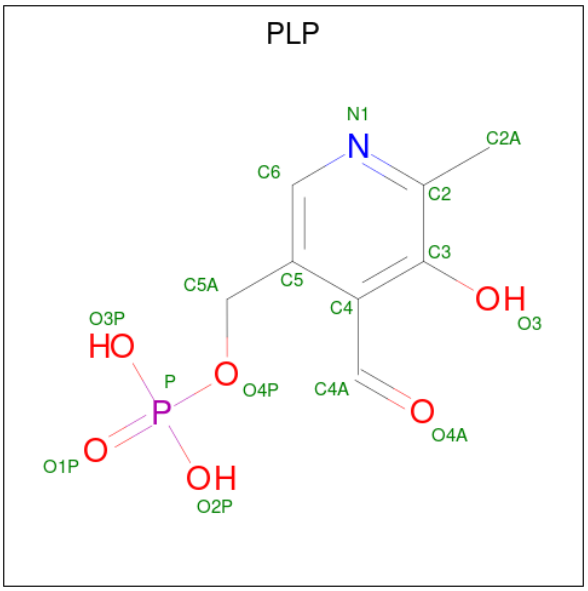

Mol	Chain	Residues	Atoms					ZeroOcc	AltConf
3	A	1	Total	C	N	O	P	0	0
			15	8	1	5	1		
3	B	1	Total	C	N	O	P	0	0
			15	8	1	5	1		
3	C	1	Total	C	N	O	P	0	0
			15	8	1	5	1		
3	D	1	Total	C	N	O	P	0	0
			15	8	1	5	1		
3	E	1	Total	C	N	O	P	0	0
			15	8	1	5	1		
3	F	1	Total	C	N	O	P	0	0
			15	8	1	5	1		

- Molecule 4 is FORMIC ACID (three-letter code: FMT) (formula: CH_2O_2).

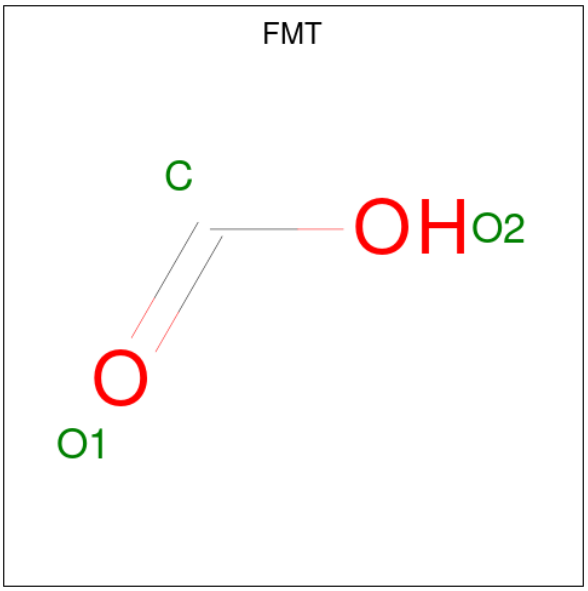

Mol	Chain	Residues	Atoms				ZeroOcc	AltConf
			Total	C	O			
4	A	1	3	1	2		0	0
			Total	C	O			
4	A	1	3	1	2		0	0
			Total	C	O			
4	A	1	3	1	2		0	0
			Total	C	O			
4	B	1	3	1	2		0	0
			Total	C	O			
4	C	1	3	1	2		0	0
			Total	C	O			
4	D	1	3	1	2		0	0
			Total	C	O			
4	D	1	3	1	2		0	0
			Total	C	O			
4	D	1	3	1	2		0	0
			Total	C	O			
4	E	1	3	1	2		0	0
			Total	C	O			
4	F	1	3	1	2		0	0
			Total	C	O			
4	F	1	3	1	2		0	0
			Total	C	O			
4	F	1	3	1	2		0	0
			Total	C	O			
4	F	1	3	1	2		0	0

- Molecule 5 is ACETIC ACID (three-letter code: ACY) (formula: $C_2H_4O_2$).

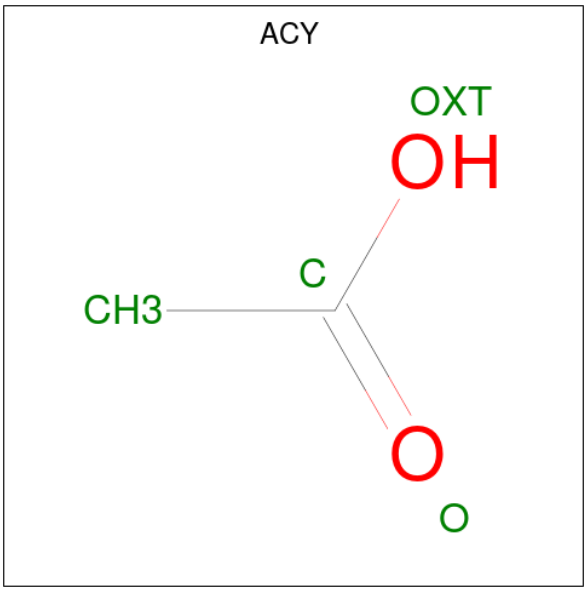

Mol	Chain	Residues	Atoms			ZeroOcc	AltConf
			Total	C	O		
5	E	1	4	2	2	0	0

- Molecule 6 is DI(HYDROXYETHYL)ETHER (three-letter code: PEG) (formula: $C_4H_{10}O_3$).

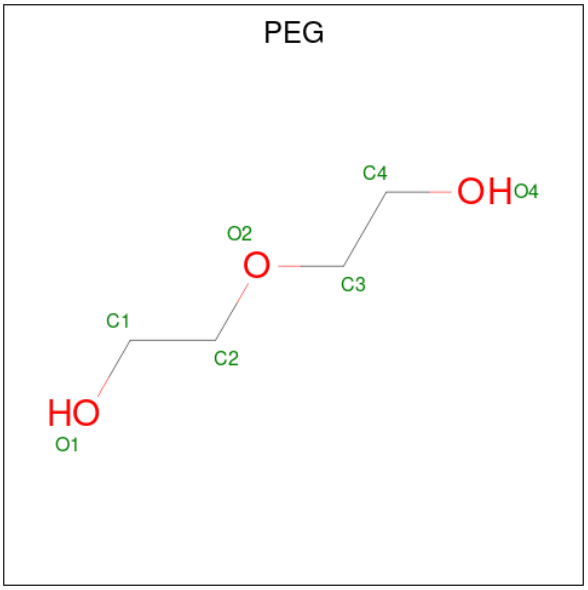

Mol	Chain	Residues	Atoms			ZeroOcc	AltConf
			Total	C	O		
6	E	1	7	4	3	0	0

- Molecule 7 is water.

Mol	Chain	Residues	Atoms		ZeroOcc	AltConf
			Total	O		
7	A	318	318	318	0	0
			Total	O		
7	B	339	339	339	0	0
			Total	O		
7	C	295	295	295	0	0
			Total	O		
7	D	346	346	346	0	0
			Total	O		
7	E	299	299	299	0	0
			Total	O		
7	F	326	326	326	0	0

3 Residue-property plots (i)

These plots are drawn for all protein, RNA, DNA and oligosaccharide chains in the entry. The first graphic for a chain summarises the proportions of the various outlier classes displayed in the second graphic. The second graphic shows the sequence view annotated by issues in geometry and electron density. Residues are color-coded according to the number of geometric quality criteria for which they contain at least one outlier: green = 0, yellow = 1, orange = 2 and red = 3 or more. A red dot above a residue indicates a poor fit to the electron density (RSRZ > 2). Stretches of 2 or more consecutive residues without any outlier are shown as a green connector. Residues present in the sample, but not in the model, are shown in grey.

• Molecule 1: Glutamate decarboxylase beta

Chain A:

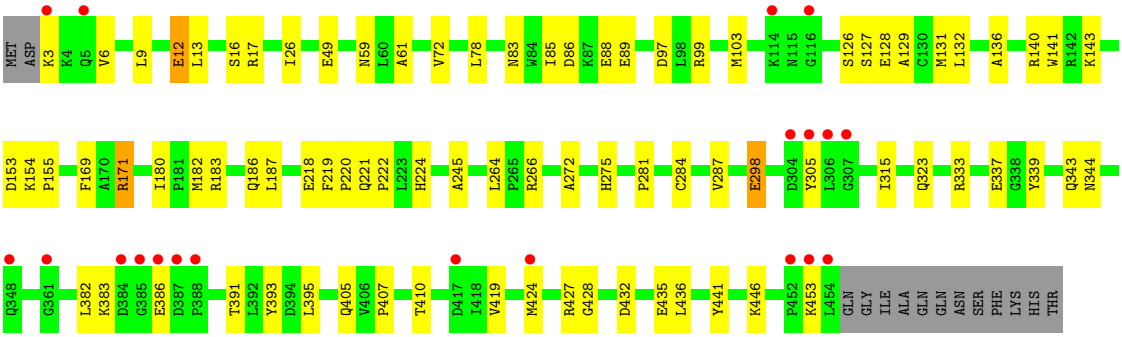

• Molecule 1: Glutamate decarboxylase beta

Chain B:

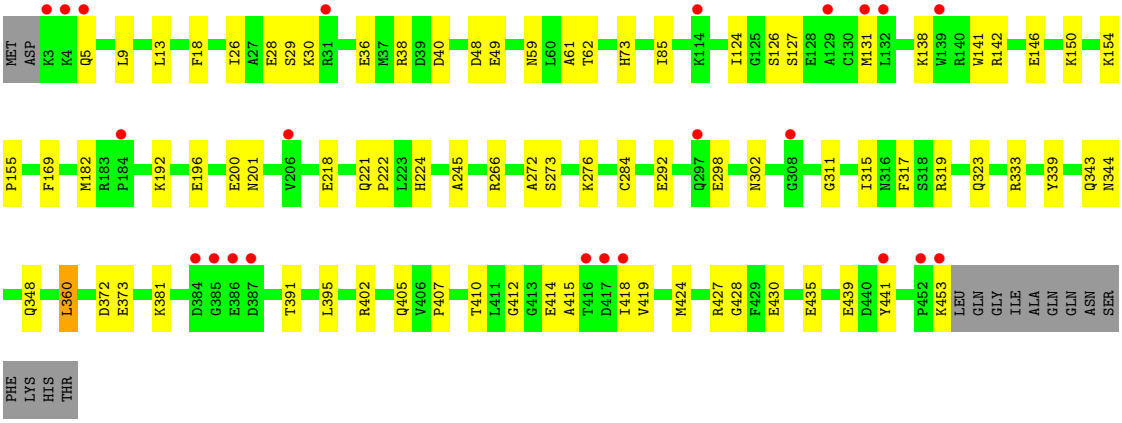

• Molecule 1: Glutamate decarboxylase beta

Chain C:

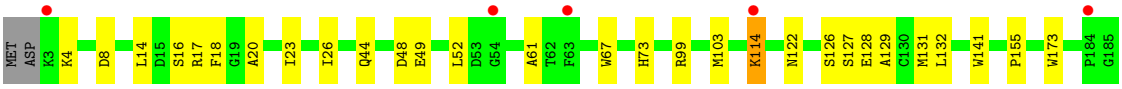

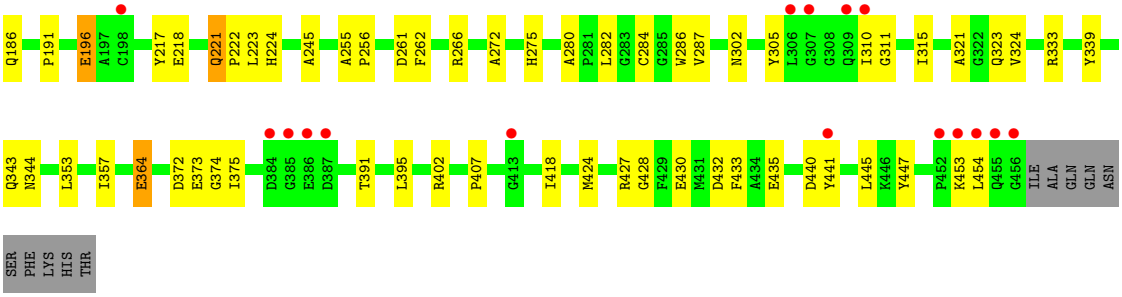

- Molecule 1: Glutamate decarboxylase beta

Chain D:

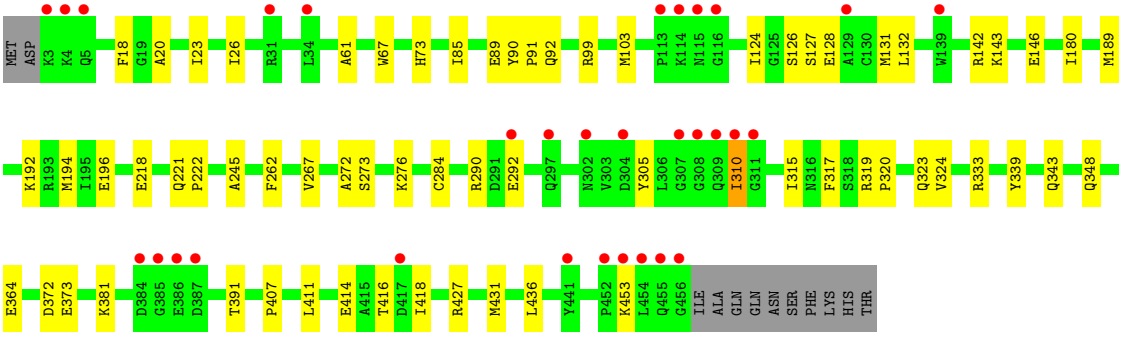

- Molecule 1: Glutamate decarboxylase beta

Chain E:

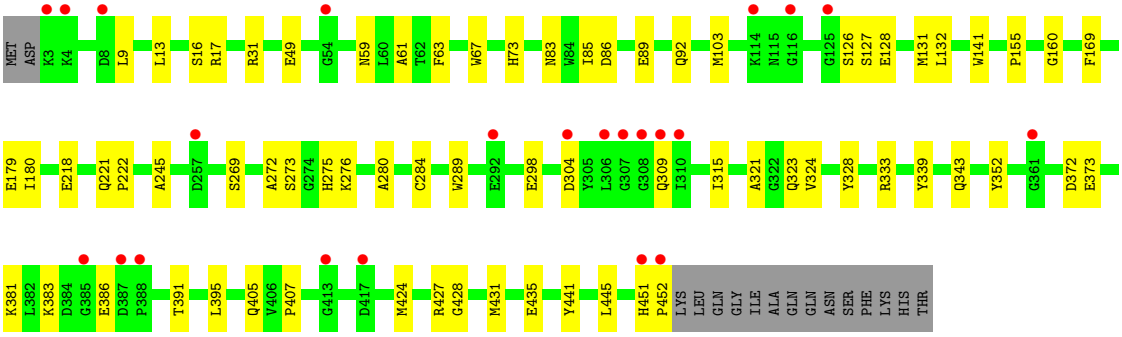

- Molecule 1: Glutamate decarboxylase beta

Chain F:

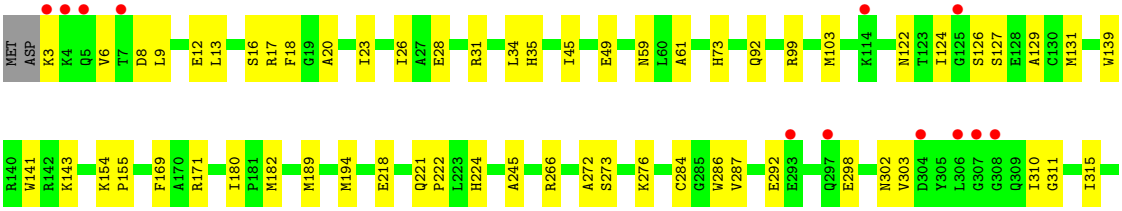

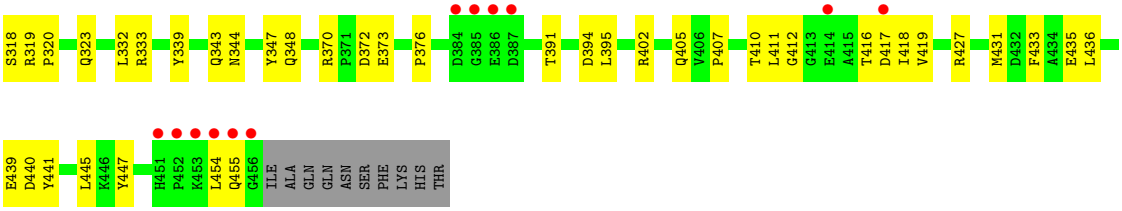
S318
R319
P320
Q323
L332
R333
Y339
Q343
N344
Y347
Q348
R370
P371
D372
E373
P376
D384
G385
E386
D387
T391
D394
L395
R402
Q405
V406
P407
T410
L411
G412
G413
E414
A415
T416
D417
I418
V419
R427
M431
D432
F433
A434
E435
L436
E439
D440
Y441
L445
K446
Y447
H451
P452
K453
L454
Q455
G456
ILE
ALA
GLN
GLN
ASN
SER
PHE
LYS
HIS
THR

4 Data and refinement statistics (i)

Property	Value	Source
Space group	P 1	Depositor
Cell constants a, b, c, α, β, γ	91.34Å 91.80Å 93.91Å 76.65° 76.94° 78.04°	Depositor
Resolution (Å)	40.00 – 1.95 36.95 – 1.95	Depositor EDS
% Data completeness (in resolution range)	92.0 (40.00-1.95) 92.2 (36.95-1.95)	Depositor EDS
R_{merge}	(Not available)	Depositor
R_{sym}	0.12	Depositor
$< I/\sigma(I) >$ [1]	2.78 (at 1.95Å)	Xtriage
Refinement program	CNS 1.1	Depositor
R, R_{free}	0.227 , 0.267 0.216 , 0.254	Depositor DCC
R_{free} test set	5338 reflections (2.79%)	wwPDB-VP
Wilson B-factor (Å^2)	20.5	Xtriage
Anisotropy	0.117	Xtriage
Bulk solvent k_{sol}(e/Å^3), B_{sol}(Å^2)	0.36 , 47.4	EDS
L-test for twinning[2]	$< \|L\| > = 0.50$, $< L^2 > = 0.33$	Xtriage
Estimated twinning fraction	0.156 for k,l,h 0.156 for l,h,k 0.013 for -k,-h,-l 0.002 for -l,-k,-h 0.008 for -h,-l,-k	Xtriage
F_o,F_c correlation	0.93	EDS
Total number of atoms	23729	wwPDB-VP
Average B, all atoms (Å^2)	20.0	wwPDB-VP

Xtriage's analysis on translational NCS is as follows: *The largest off-origin peak in the Patterson function is 4.78% of the height of the origin peak. No significant pseudotranslation is detected.*

[1]Intensities estimated from amplitudes.

[2]Theoretical values of $< |L| >$, $< L^2 >$ for acentric reflections are 0.5, 0.333 respectively for untwinned datasets, and 0.375, 0.2 for perfectly twinned datasets.

5 Model quality (i)

5.1 Standard geometry (i)

Bond lengths and bond angles in the following residue types are not validated in this section: PEG, PLP, FMT, ACY, IOD

The Z score for a bond length (or angle) is the number of standard deviations the observed value is removed from the expected value. A bond length (or angle) with $|Z| > 5$ is considered an outlier worth inspection. RMSZ is the root-mean-square of all Z scores of the bond lengths (or angles).

Mol	Chain	Bond lengths		Bond angles	
		RMSZ	$\#\|Z\|>5$	RMSZ	$\#\|Z\|>5$
1	A	0.34	0/3711	0.60	2/5028 (0.0%)
1	B	0.34	0/3692	0.59	1/5003 (0.0%)
1	C	0.33	0/3721	0.59	1/5041 (0.0%)
1	D	0.34	0/3737	0.59	1/5065 (0.0%)
1	E	0.34	0/3691	0.59	1/5002 (0.0%)
1	F	0.34	0/3723	0.59	1/5046 (0.0%)
All	All	0.34	0/22275	0.59	7/30185 (0.0%)

There are no bond length outliers.

All (7) bond angle outliers are listed below:

Mol	Chain	Res	Type	Atoms	Z	Observed(^{o})	Ideal(^{o})
1	E	218	GLU	N-CA-C	-5.65	95.75	111.00
1	A	218	GLU	N-CA-C	-5.45	96.28	111.00
1	A	78	LEU	CA-CB-CG	5.33	127.57	115.30
1	C	218	GLU	N-CA-C	-5.27	96.77	111.00
1	D	218	GLU	N-CA-C	-5.26	96.81	111.00
1	B	218	GLU	N-CA-C	-5.21	96.94	111.00
1	F	218	GLU	N-CA-C	-5.20	96.97	111.00

There are no chirality outliers.

There are no planarity outliers.

5.2 Too-close contacts (i)

In the following table, the Non-H and H(model) columns list the number of non-hydrogen atoms and hydrogen atoms in the chain respectively. The H(added) column lists the number of hydrogen atoms added and optimized by MolProbity. The Clashes column lists the number of clashes within the asymmetric unit, whereas Symm-Clashes lists symmetry-related clashes.

Mol	Chain	Non-H	H(model)	H(added)	Clashes	Symm-Clashes
1	A	3604	0	3518	63	0
1	B	3591	0	3502	62	0
1	C	3614	0	3529	63	0
1	D	3621	0	3529	49	0
1	E	3585	0	3494	51	0
1	F	3619	0	3529	84	0
2	A	6	0	0	5	0
2	B	6	0	0	7	0
2	C	4	0	0	4	0
2	D	6	0	0	5	0
2	E	5	0	0	6	0
2	F	5	0	0	5	0
3	A	15	0	6	2	0
3	B	15	0	6	1	0
3	C	15	0	6	1	0
3	D	15	0	6	1	0
3	E	15	0	6	1	0
3	F	15	0	6	1	0
4	A	9	0	3	1	0
4	B	3	0	1	0	0
4	C	3	0	1	0	0
4	D	9	0	3	0	0
4	E	3	0	1	0	0
4	F	12	0	4	0	0
5	E	4	0	3	1	0
6	E	7	0	10	0	0
7	A	318	0	0	2	0
7	B	339	0	0	2	0
7	C	295	0	0	0	0
7	D	346	0	0	3	0
7	E	299	0	0	0	0
7	F	326	0	0	3	0
All	All	23729	0	21163	332	0

The all-atom clashscore is defined as the number of clashes found per 1000 atoms (including hydrogen atoms). The all-atom clashscore for this structure is 8.

All (332) close contacts within the same asymmetric unit are listed below, sorted by their clash magnitude.

Atom-1	Atom-2	Interatomic distance (Å)	Clash overlap (Å)
1:C:114:LYS:H	1:C:114:LYS:HD3	1.19	1.02
1:A:453:LYS:HB2	2:A:2343:IOD:I	2.36	0.95

Continued on next page...

Continued from previous page...

Atom-1	Atom-2	Interatomic distance (Å)	Clash overlap (Å)
1:E:431:MET:HE3	1:E:431:MET:HA	1.57	0.87
1:A:171:ARG:HH11	1:A:171:ARG:HB2	1.43	0.83
1:D:26:ILE:HD13	1:E:435:GLU:HG3	1.64	0.77
1:D:221:GLN:HB3	1:D:222:PRO:HD3	1.66	0.76
1:E:339:TYR:O	1:E:343:GLN:HG2	1.85	0.75
1:F:348:GLN:HE21	1:F:431:MET:CE	2.00	0.75
1:A:131[B]:MET:SD	1:B:315:ILE:HG23	2.27	0.74
1:B:127:SER:O	1:B:131[B]:MET:HG2	1.89	0.73
1:F:339:TYR:O	1:F:343:GLN:HG2	1.90	0.72
1:B:142:ARG:O	1:B:146:GLU:HG3	1.89	0.71
1:B:182:MET:CE	1:B:412:GLY:H	2.03	0.71
1:C:339:TYR:O	1:C:343:GLN:HG2	1.91	0.71
2:B:2332:IOD:I	1:C:427:ARG:HD2	2.62	0.70
1:D:436:LEU:HD11	1:E:49:GLU:HG2	1.74	0.70
1:A:153:ASP:O	1:A:154:LYS:HD3	1.91	0.69
1:E:61:ALA:HB2	1:E:407:PRO:HD3	1.73	0.69
1:E:131[B]:MET:SD	1:F:315:ILE:HG23	2.33	0.68
1:F:180:ILE:HD12	1:F:189:MET:HG3	1.75	0.68
1:C:302:ASN:HD22	1:C:311:GLY:HA2	1.58	0.67
1:F:348:GLN:HE21	1:F:431:MET:HE3	1.60	0.67
1:C:126:SER:HB2	3:C:501:PLP:O4P	1.96	0.66
1:A:339:TYR:O	1:A:343:GLN:HG2	1.95	0.66
2:A:2331:IOD:I	1:F:427:ARG:HD2	2.66	0.66
1:C:131[B]:MET:SD	1:D:315:ILE:HG23	2.36	0.65
1:D:143:LYS:HD2	7:D:2772:HOH:O	1.96	0.65
1:B:339:TYR:O	1:B:343:GLN:HG2	1.97	0.65
1:F:302:ASN:HD22	1:F:311:GLY:HA2	1.60	0.65
1:F:143:LYS:HA	1:F:143:LYS:HE2	1.78	0.65
1:B:221:GLN:HB3	1:B:222:PRO:HD3	1.78	0.64
1:E:391:THR:HB	2:E:2359:IOD:I	2.67	0.64
1:C:127:SER:O	1:C:131[A]:MET:HG2	1.97	0.64
1:A:12:GLU:OE1	1:C:14:LEU:HD21	1.98	0.64
1:B:292:GLU:HG3	7:B:2772:HOH:O	1.97	0.64
1:C:221:GLN:HB3	1:C:222:PRO:HD3	1.81	0.62
1:E:127:SER:O	1:E:131[A]:MET:HG2	1.99	0.62
1:F:127:SER:O	1:F:131[B]:MET:HG2	2.00	0.61
1:D:305:TYR:HB2	1:D:310[A]:ILE:HD12	1.82	0.61
1:D:339:TYR:O	1:D:343:GLN:HG2	2.01	0.61
1:C:372:ASP:OD1	1:C:373:GLU:HG3	2.01	0.61
1:D:245:ALA:HA	1:D:272:ALA:HA	1.82	0.61
1:F:410:THR:HG22	1:F:419:VAL:HG22	1.82	0.61

Continued on next page...

Continued from previous page...

Atom-1	Atom-2	Interatomic distance (Å)	Clash overlap (Å)
1:E:383:LYS:HB2	1:E:386:GLU:HG3	1.82	0.61
1:F:395:LEU:HD21	1:F:441:TYR:CZ	2.35	0.61
1:E:221:GLN:HB3	1:E:222:PRO:HD3	1.83	0.61
1:E:126:SER:HB2	3:E:502:PLP:O4P	2.01	0.60
1:F:245:ALA:HA	1:F:272:ALA:HA	1.82	0.60
1:F:182:MET:CE	1:F:412:GLY:H	2.14	0.60
1:B:182:MET:HE3	1:B:412:GLY:H	1.65	0.60
1:B:391:THR:HB	2:B:2356:IOD:I	2.72	0.60
1:B:427:ARG:HD2	2:B:2333:IOD:I	2.71	0.59
1:D:142:ARG:O	1:D:146:GLU:HG3	2.02	0.59
1:C:395:LEU:HD21	1:C:441:TYR:CZ	2.37	0.59
1:B:26:ILE:HD13	1:C:435:GLU:HG2	1.85	0.59
1:A:59:ASN:HA	1:A:405:GLN:HB2	1.84	0.59
1:C:61:ALA:HB2	1:C:407:PRO:HD3	1.85	0.58
1:B:418:ILE:HD13	2:B:2338:IOD:I	2.73	0.58
1:E:395:LEU:HD21	1:E:441:TYR:CZ	2.38	0.58
1:A:126:SER:HB2	3:A:500:PLP:O4P	2.03	0.58
1:A:298:GLU:H	1:A:298:GLU:CD	2.07	0.58
1:D:180:ILE:HD12	1:D:189:MET:HG3	1.84	0.58
1:F:435:GLU:O	1:F:439:GLU:HG3	2.03	0.58
1:C:441:TYR:HE1	1:C:445:LEU:HD11	1.69	0.57
1:A:315:ILE:HG21	1:B:315:ILE:HG21	1.86	0.57
1:A:3:LYS:O	1:A:6:VAL:HG12	2.04	0.57
1:B:372:ASP:OD1	1:B:373:GLU:HG3	2.05	0.57
1:D:305:TYR:CB	1:D:310[A]:ILE:HD12	2.33	0.57
1:D:348:GLN:HE21	1:D:431:MET:CE	2.17	0.57
1:F:180:ILE:HD11	1:F:194:MET:HA	1.87	0.57
1:B:138:LYS:O	1:B:142:ARG:HG3	2.04	0.57
1:F:154:LYS:HD2	7:F:2887:HOH:O	2.04	0.57
1:F:131[B]:MET:SD	1:F:169:PHE:HB2	2.44	0.56
1:B:298:GLU:CD	1:B:298:GLU:H	2.09	0.56
1:C:114:LYS:HD3	1:C:114:LYS:N	2.03	0.56
1:A:410:THR:HG22	1:A:419:VAL:HG22	1.87	0.56
1:D:427:ARG:HD2	2:E:2335:IOD:I	2.75	0.56
1:B:435:GLU:HG3	1:C:26:ILE:HD13	1.89	0.55
1:A:395:LEU:HD21	1:A:441:TYR:CZ	2.41	0.55
1:C:4:LYS:HD2	1:C:4:LYS:C	2.27	0.55
1:C:315:ILE:HG23	1:D:131[A]:MET:SD	2.47	0.55
1:D:126:SER:HB2	3:D:501:PLP:O4P	2.06	0.55
1:D:127:SER:O	1:D:131[B]:MET:HG2	2.07	0.55
1:D:391:THR:HB	2:D:2358:IOD:I	2.77	0.55

Continued on next page...

Continued from previous page...

Atom-1	Atom-2	Interatomic distance (Å)	Clash overlap (Å)
1:D:292:GLU:HG3	7:D:2836:HOH:O	2.07	0.54
1:F:292:GLU:HG3	7:F:2810:HOH:O	2.08	0.54
1:A:16:SER:HB2	2:A:2331:IOD:I	2.78	0.54
1:A:221:GLN:HB3	1:A:222:PRO:HD3	1.90	0.54
1:B:126:SER:HB2	3:B:500:PLP:O4P	2.08	0.54
1:F:182:MET:HE3	1:F:412:GLY:H	1.72	0.54
1:F:126:SER:HB2	3:F:502:PLP:O4P	2.08	0.54
1:F:411:LEU:O	1:F:416:THR:HA	2.08	0.54
1:D:418:ILE:HD12	1:D:418:ILE:N	2.23	0.53
1:D:411:LEU:O	1:D:416:THR:HA	2.09	0.53
1:A:127:SER:O	1:A:131[A]:MET:HG2	2.09	0.53
1:D:89:GLU:C	1:D:91:PRO:HD3	2.29	0.53
1:F:3:LYS:O	1:F:6:VAL:HG22	2.09	0.53
1:A:424:MET:HG2	7:A:2713:HOH:O	2.08	0.53
1:B:124:ILE:HD11	1:B:319:ARG:HD2	1.91	0.53
1:B:302:ASN:HD22	1:B:311:GLY:HA2	1.73	0.53
1:E:372:ASP:OD1	1:E:373:GLU:HG3	2.09	0.53
1:E:451:HIS:N	1:E:452:PRO:HD3	2.24	0.53
1:F:61:ALA:HB2	1:F:407:PRO:HD3	1.90	0.52
1:A:49:GLU:HG2	1:F:436:LEU:HD11	1.90	0.52
1:A:128:GLU:O	1:A:132:LEU:HG	2.09	0.52
1:D:372:ASP:OD1	1:D:373:GLU:HG3	2.09	0.52
1:A:182:MET:HE1	1:A:187:LEU:HB3	1.92	0.52
1:F:34:LEU:HD22	1:F:35:HIS:CD2	2.44	0.52
1:A:428:GLY:HA2	1:F:18:PHE:CE1	2.44	0.52
1:F:298:GLU:H	1:F:298:GLU:CD	2.12	0.52
1:F:221:GLN:HB3	1:F:222:PRO:HD3	1.91	0.52
1:F:348:GLN:HE21	1:F:431:MET:HE2	1.72	0.52
1:E:245:ALA:HA	1:E:272:ALA:HA	1.90	0.52
1:E:49:GLU:O	1:F:92:GLN:HG2	2.10	0.51
1:C:99:ARG:O	1:C:103:MET:HG3	2.11	0.51
1:C:49:GLU:O	1:D:92:GLN:HG2	2.09	0.51
1:A:245:ALA:HA	1:A:272:ALA:HA	1.92	0.51
1:F:34:LEU:HD22	1:F:35:HIS:NE2	2.25	0.51
1:E:160:GLY:O	1:E:179:GLU:HG3	2.10	0.51
1:D:73:HIS:NE2	2:D:2352:IOD:I	3.07	0.51
1:F:171:ARG:HG2	1:F:171:ARG:HH11	1.76	0.51
1:A:131[A]:MET:CE	1:A:169:PHE:HB2	2.41	0.51
1:B:224:HIS:CD2	1:B:266:ARG:HB2	2.46	0.50
1:A:61:ALA:HB2	1:A:407:PRO:HD3	1.92	0.50
1:E:86:ASP:HB3	1:E:89:GLU:HB2	1.94	0.50

Continued on next page...

Continued from previous page...

Atom-1	Atom-2	Interatomic distance (Å)	Clash overlap (Å)
1:A:315:ILE:HG23	1:B:131[A]:MET:SD	2.52	0.50
1:E:92:GLN:HG2	1:F:49:GLU:O	2.11	0.50
1:F:447:TYR:HE2	1:F:454:LEU:HD11	1.76	0.50
1:C:67:TRP:HA	2:C:2351:IOD:I	2.81	0.50
1:B:453:LYS:HE3	1:C:453:LYS:HE3	1.94	0.50
1:F:303:VAL:HG23	1:F:310:ILE:HG23	1.94	0.50
1:B:245:ALA:HA	1:B:272:ALA:HA	1.94	0.49
1:C:20:ALA:O	1:C:23:ILE:HG22	2.12	0.49
1:B:395:LEU:HD21	1:B:441:TYR:CZ	2.47	0.49
1:C:196:GLU:OE1	1:C:196:GLU:HA	2.12	0.49
1:E:131[A]:MET:HE1	1:E:169:PHE:HB2	1.93	0.49
1:A:88:GLU:OE1	1:A:305:TYR:HA	2.13	0.49
1:C:114:LYS:H	1:C:114:LYS:CD	2.00	0.49
1:A:141:TRP:CZ3	1:A:155:PRO:HB3	2.47	0.49
1:C:255:ALA:N	1:C:256:PRO:HD3	2.28	0.49
1:F:16:SER:HB2	2:F:2336:IOD:I	2.83	0.49
1:D:180:ILE:HD11	1:D:194:MET:HA	1.94	0.49
1:F:402:ARG:HD3	1:F:440:ASP:CG	2.33	0.49
1:A:435:GLU:HG3	1:F:26:ILE:HD13	1.95	0.48
1:C:315:ILE:HD13	1:D:315:ILE:HG21	1.95	0.48
1:A:284:CYS:HB2	1:A:323:GLN:HB3	1.96	0.48
1:F:391:THR:HB	2:F:2360:IOD:I	2.83	0.48
1:B:61:ALA:HB2	1:B:407:PRO:HD3	1.95	0.48
1:B:73:HIS:NE2	2:B:2350:IOD:I	3.16	0.48
1:B:182:MET:HE1	1:B:412:GLY:H	1.74	0.48
1:F:303:VAL:CG2	1:F:310:ILE:HG23	2.44	0.48
1:E:103:MET:HE3	1:E:328:TYR:HE1	1.79	0.48
1:E:315:ILE:HG23	1:F:131[A]:MET:SD	2.54	0.48
1:E:16:SER:HB2	2:E:2335:IOD:I	2.84	0.47
1:A:171:ARG:HH11	1:A:171:ARG:CB	2.21	0.47
1:C:441:TYR:CE1	1:C:445:LEU:HD11	2.47	0.47
1:F:319:ARG:HB2	1:F:320:PRO:HD2	1.97	0.47
1:F:124:ILE:HD11	1:F:319:ARG:HD2	1.95	0.47
1:A:129:ALA:HB1	1:A:287:VAL:HB	1.96	0.47
1:A:382:LEU:HD12	2:A:2355:IOD:I	2.85	0.47
1:D:364:GLU:OE1	1:D:381:LYS:NZ	2.44	0.47
1:A:9:LEU:HG	1:E:9:LEU:HD21	1.96	0.47
1:B:360:LEU:HD23	1:B:441:TYR:CD1	2.50	0.47
1:A:180:ILE:N	1:A:180:ILE:HD12	2.30	0.47
1:E:67:TRP:HA	2:E:2353:IOD:I	2.84	0.47
1:C:122:ASN:HB2	1:C:286:TRP:CZ3	2.50	0.47

Continued on next page...

Continued from previous page...

Atom-1	Atom-2	Interatomic distance (Å)	Clash overlap (Å)
1:C:131[B]:MET:HG2	1:C:173:TRP:CZ3	2.50	0.47
1:B:18:PHE:CE1	1:C:428:GLY:HA2	2.50	0.47
1:A:143:LYS:HD2	7:A:2718:HOH:O	2.14	0.47
1:A:186:GLN:O	1:A:186:GLN:HG3	2.15	0.47
1:C:141:TRP:CZ3	1:C:155:PRO:HB3	2.50	0.46
1:D:348:GLN:HE21	1:D:431:MET:HE2	1.79	0.46
1:A:427:ARG:HD2	2:F:2336:IOD:I	2.84	0.46
1:C:128:GLU:O	1:C:132:LEU:HG	2.15	0.46
1:F:139[A]:TRP:CZ2	1:F:298:GLU:HG2	2.51	0.46
1:B:13:LEU:HD13	1:F:13:LEU:HD13	1.97	0.46
1:A:383:LYS:HB2	1:A:386:GLU:CG	2.45	0.46
1:B:344:ASN:O	1:B:348:GLN:HG3	2.16	0.46
1:C:402:ARG:HE	1:C:440:ASP:CG	2.19	0.46
1:D:192:LYS:O	1:D:196:GLU:HG3	2.14	0.46
1:A:183:ARG:NH2	1:A:186:GLN:OE1	2.47	0.46
1:C:129:ALA:HB1	1:C:287:VAL:HB	1.97	0.46
1:F:370:ARG:HE	1:F:373:GLU:CD	2.18	0.46
1:E:273:SER:HB2	1:E:276:LYS:HG3	1.97	0.46
1:E:441:TYR:HE1	1:E:445:LEU:HD11	1.80	0.46
1:B:435:GLU:O	1:B:439:GLU:HG3	2.15	0.46
1:C:375:ILE:HD12	1:C:424[A]:MET:HE1	1.96	0.46
1:C:321:ALA:O	1:C:324:VAL:HG12	2.16	0.46
1:F:441:TYR:HE1	1:F:445:LEU:HD11	1.80	0.46
1:A:83:ASN:OD1	1:A:85:ILE:HG22	2.16	0.46
1:A:99:ARG:HG2	1:B:29:SER:HB2	1.97	0.46
1:A:337:GLU:CD	1:B:36:GLU:HG2	2.36	0.46
1:E:284:CYS:HB2	1:E:323:GLN:HB3	1.98	0.46
1:C:305:TYR:HB2	1:C:310:ILE:HG22	1.97	0.45
1:A:183:ARG:NE	1:A:186:GLN:OE1	2.46	0.45
1:D:324:VAL:HG12	7:D:2804:HOH:O	2.16	0.45
1:E:315:ILE:HG21	1:F:315:ILE:HG21	1.98	0.45
1:D:61:ALA:HB2	1:D:407:PRO:HD3	1.99	0.45
1:C:245:ALA:HA	1:C:272:ALA:HA	1.98	0.45
1:D:67:TRP:HA	2:D:2352:IOD:I	2.86	0.45
1:E:17:ARG:HE	1:E:17:ARG:HB2	1.66	0.45
1:B:5:GLN:OE1	1:F:6:VAL:HG21	2.17	0.45
1:B:284:CYS:HB2	1:B:323:GLN:HB3	1.99	0.45
1:F:284:CYS:HB2	1:F:323:GLN:HB3	1.98	0.45
1:B:141:TRP:CZ3	1:B:155:PRO:HB3	2.52	0.45
1:B:410:THR:HG22	1:B:419:VAL:HG22	1.97	0.45
1:E:352:TYR:CD2	1:E:431:MET:HE1	2.51	0.45

Continued on next page...

Continued from previous page...

Atom-1	Atom-2	Interatomic distance (Å)	Clash overlap (Å)
1:A:395:LEU:HD21	1:A:441:TYR:CE2	2.52	0.45
1:E:269:SER:HB3	1:E:289:TRP:CD1	2.52	0.44
1:A:432:ASP:O	1:A:436:LEU:HD23	2.17	0.44
1:B:59:ASN:HA	1:B:405:GLN:HB2	1.99	0.44
1:C:284:CYS:HB2	1:C:323:GLN:HB3	1.98	0.44
1:A:428:GLY:HA2	1:F:18:PHE:CZ	2.53	0.44
1:D:128:GLU:O	1:D:132:LEU:HG	2.18	0.44
1:E:275:HIS:HA	1:E:280:ALA:O	2.18	0.44
1:E:381:LYS:HE2	2:E:2341:IOD:I	2.87	0.44
1:C:186:GLN:O	1:C:186:GLN:HG3	2.16	0.44
1:D:262:PHE:CD1	1:D:290:ARG:HB3	2.52	0.44
1:E:298:GLU:CD	1:E:298:GLU:H	2.21	0.44
1:F:394:ASP:OD2	1:F:455:GLN:HA	2.18	0.44
1:A:13:LEU:HD13	1:E:13:LEU:HD13	1.99	0.44
1:B:124:ILE:CD1	1:B:319:ARG:HD2	2.47	0.44
1:E:273:SER:CB	1:E:276:LYS:HG3	2.47	0.44
1:C:191:PRO:HG3	1:C:223:LEU:HD23	1.98	0.44
1:E:321:ALA:O	1:E:324:VAL:HG12	2.18	0.44
1:B:48:ASP:OD2	1:C:430:GLU:OE2	2.36	0.44
1:D:273:SER:CB	1:D:276:LYS:HG3	2.47	0.44
1:B:192:LYS:O	1:B:196:GLU:HG3	2.16	0.44
1:B:414:GLU:N	1:B:414:GLU:OE1	2.51	0.44
1:B:424:MET:HG2	7:B:2701:HOH:O	2.16	0.44
1:D:20:ALA:O	1:D:23:ILE:HG22	2.18	0.44
1:F:273:SER:CB	1:F:276:LYS:HG3	2.48	0.44
1:A:446:LYS:O	1:A:446:LYS:HD3	2.18	0.43
1:B:29:SER:C	1:B:30:LYS:HD2	2.38	0.43
1:C:261:ASP:HB2	1:C:262:PHE:H	1.61	0.43
1:F:141:TRP:CZ3	1:F:155:PRO:HB3	2.53	0.43
1:C:447:TYR:HE1	1:C:454:LEU:HD11	1.82	0.43
1:A:26:ILE:HD13	1:F:435:GLU:HG3	2.00	0.43
1:A:103:MET:CE	1:B:28:GLU:HG3	2.48	0.43
1:A:153:ASP:OD2	1:A:154:LYS:HE2	2.18	0.43
1:B:273:SER:CB	1:B:276:LYS:HG3	2.49	0.43
1:C:73:HIS:NE2	2:C:2351:IOD:I	3.11	0.43
1:D:18:PHE:CE1	1:E:428:GLY:HA2	2.53	0.43
1:E:141:TRP:CZ3	1:E:155:PRO:HB3	2.53	0.43
1:E:180:ILE:HD12	1:E:180:ILE:N	2.33	0.43
1:A:17:ARG:HE	1:A:17:ARG:HB2	1.60	0.43
1:B:154:LYS:O	1:B:201:ASN:HB3	2.18	0.43
1:C:275:HIS:HA	1:C:280:ALA:O	2.18	0.43

Continued on next page...

Continued from previous page...

Atom-1	Atom-2	Interatomic distance (Å)	Clash overlap (Å)
1:B:49:GLU:OE2	1:C:432:ASP:OD2	2.37	0.43
1:D:284:CYS:HB2	1:D:323:GLN:HB3	2.00	0.43
1:F:28:GLU:HG2	1:F:31:ARG:O	2.19	0.43
1:F:122:ASN:HB2	1:F:286:TRP:CZ3	2.54	0.43
1:C:17:ARG:NH1	1:C:44:GLN:OE1	2.51	0.43
1:F:34:LEU:HD23	1:F:34:LEU:O	2.18	0.43
1:F:303:VAL:HG23	1:F:310:ILE:CG2	2.49	0.43
1:C:391:THR:HB	2:C:2357:IOD:I	2.88	0.43
1:D:90:TYR:N	1:D:91:PRO:HD3	2.33	0.43
1:C:217:TYR:CD2	1:C:374:GLY:HA2	2.54	0.43
1:F:8:ASP:O	1:F:12:GLU:HG3	2.19	0.43
1:B:9:LEU:HD21	1:F:9:LEU:HG	2.01	0.42
1:D:85:ILE:HG12	1:D:317:PHE:CD1	2.54	0.42
1:F:45:ILE:O	1:F:49:GLU:HG3	2.20	0.42
1:A:275:HIS:NE2	3:A:500:PLP:O1P	2.47	0.42
1:C:4:LYS:HD3	1:C:8:ASP:OD2	2.18	0.42
1:D:273:SER:HB2	1:D:276:LYS:HG3	2.01	0.42
1:D:99:ARG:O	1:D:103:MET:HG3	2.19	0.42
1:F:129:ALA:HB1	1:F:287:VAL:HB	2.02	0.42
1:A:224:HIS:CD2	1:A:264:LEU:HB3	2.55	0.42
1:D:124:ILE:HD11	1:D:319:ARG:HD2	2.00	0.42
2:D:2334:IOD:I	1:E:427:ARG:HD2	2.90	0.42
1:E:304:ASP:HA	1:E:309:GLN:HG2	2.01	0.42
1:F:124:ILE:HD13	1:F:124:ILE:HA	1.97	0.42
1:C:224:HIS:CD2	1:C:266:ARG:HB2	2.55	0.42
1:C:418:ILE:HD13	2:C:2339:IOD:I	2.89	0.42
1:D:348:GLN:HE21	1:D:431:MET:HE3	1.84	0.42
1:F:347:TYR:CE2	1:F:376:PRO:HG3	2.55	0.42
1:A:343:GLN:OE1	1:A:343:GLN:HA	2.19	0.42
1:B:428:GLY:HA2	1:C:18:PHE:CE1	2.55	0.42
2:B:2333:IOD:I	1:C:16:SER:HB2	2.90	0.42
1:F:73:HIS:NE2	2:F:2354:IOD:I	3.17	0.42
1:F:224:HIS:CD2	1:F:266:ARG:HB2	2.54	0.42
1:F:441:TYR:CE1	1:F:445:LEU:HD11	2.55	0.42
1:A:219:PHE:HA	1:A:220:PRO:HD3	1.89	0.41
1:A:393:TYR:OH	1:A:410:THR:HG23	2.20	0.41
1:A:72:VAL:HG11	1:A:281:PRO:HG3	2.02	0.41
1:A:344:ASN:HD22	1:A:344:ASN:HA	1.67	0.41
1:A:391:THR:HB	2:A:2355:IOD:I	2.91	0.41
1:B:395:LEU:HD21	1:B:441:TYR:CE2	2.54	0.41
1:E:343:GLN:OE1	1:E:343:GLN:HA	2.21	0.41

Continued on next page...

Continued from previous page...

Atom-1	Atom-2	Interatomic distance (Å)	Clash overlap (Å)
1:F:124:ILE:CD1	1:F:319:ARG:HD2	2.50	0.41
1:E:31:ARG:O	1:F:103:MET:HE2	2.20	0.41
1:F:20:ALA:O	1:F:23:ILE:HG22	2.20	0.41
1:F:99:ARG:O	1:F:103:MET:HG3	2.19	0.41
1:A:224:HIS:CD2	1:A:266:ARG:HB2	2.56	0.41
1:E:73:HIS:NE2	2:E:2353:IOD:I	3.10	0.41
1:B:402:ARG:NH2	1:C:52:LEU:HD12	2.35	0.41
1:F:59:ASN:HA	1:F:405:GLN:HB2	2.03	0.41
1:E:383:LYS:HB2	1:E:386:GLU:CG	2.49	0.41
1:F:395:LEU:HD21	1:F:441:TYR:CE2	2.56	0.41
1:A:86:ASP:HB3	1:A:89:GLU:HB2	2.02	0.41
1:B:430:GLU:OE2	1:C:48:ASP:OD2	2.38	0.41
1:F:182:MET:HE1	1:F:412:GLY:H	1.86	0.41
1:F:344:ASN:ND2	7:F:2982:HOH:O	2.53	0.41
1:F:418:ILE:HD13	2:F:2342:IOD:I	2.91	0.41
1:C:364:GLU:OE1	1:C:364:GLU:C	2.60	0.41
1:F:17:ARG:HE	1:F:17:ARG:HB2	1.59	0.41
1:F:34:LEU:HD22	1:F:35:HIS:CE1	2.56	0.41
1:F:344:ASN:HD22	1:F:344:ASN:HA	1.67	0.41
1:D:267:VAL:O	1:D:290:ARG:HD2	2.20	0.40
1:E:59:ASN:HA	1:E:405:GLN:HB2	2.01	0.40
1:F:370:ARG:NH2	1:F:372:ASP:OD2	2.54	0.40
1:F:402:ARG:HD3	1:F:440:ASP:OD1	2.20	0.40
1:B:38:ARG:HB3	1:B:40:ASP:OD1	2.21	0.40
1:B:150:LYS:NZ	1:B:200:GLU:OE1	2.45	0.40
1:C:344:ASN:HD22	1:C:344:ASN:HA	1.69	0.40
5:E:2519:ACY:H2	1:F:318:SER:OG	2.21	0.40
1:F:372:ASP:OD1	1:F:373:GLU:HG3	2.21	0.40
4:A:2550:FMT:H	1:B:62:THR:HA	2.02	0.40
1:B:85:ILE:HG12	1:B:317:PHE:CD1	2.56	0.40
1:B:381:LYS:HE2	2:B:2338:IOD:I	2.92	0.40
1:C:282:LEU:O	1:D:320:PRO:HG3	2.22	0.40
1:D:453:LYS:HD2	2:D:2346:IOD:I	2.92	0.40
1:E:63:PHE:CE2	1:E:424[A]:MET:HE1	2.56	0.40
1:E:83:ASN:OD1	1:E:85:ILE:HG22	2.21	0.40
1:B:415:ALA:HB1	1:B:418:ILE:HD12	2.02	0.40
1:C:395:LEU:HD21	1:C:441:TYR:CE2	2.56	0.40
1:E:128:GLU:O	1:E:132:LEU:HG	2.22	0.40
1:A:136:ALA:O	1:A:140:ARG:HG3	2.22	0.40
1:B:131[B]:MET:SD	1:B:169:PHE:HB2	2.62	0.40
1:C:353:LEU:O	1:C:357:ILE:HG13	2.21	0.40

There are no symmetry-related clashes.

5.3 Torsion angles (i)

5.3.1 Protein backbone (i)

In the following table, the Percentiles column shows the percent Ramachandran outliers of the chain as a percentile score with respect to all X-ray entries followed by that with respect to entries of similar resolution.

The Analysed column shows the number of residues for which the backbone conformation was analysed, and the total number of residues.

Mol	Chain	Analysed	Favoured	Allowed	Outliers	Percentiles	
1	A	453/466 (97%)	444 (98%)	9 (2%)	0	100	100
1	B	451/466 (97%)	437 (97%)	14 (3%)	0	100	100
1	C	455/466 (98%)	441 (97%)	14 (3%)	0	100	100
1	D	456/466 (98%)	443 (97%)	13 (3%)	0	100	100
1	E	451/466 (97%)	437 (97%)	14 (3%)	0	100	100
1	F	454/466 (97%)	441 (97%)	13 (3%)	0	100	100
All	All	2720/2796 (97%)	2643 (97%)	77 (3%)	0	100	100

There are no Ramachandran outliers to report.

5.3.2 Protein sidechains (i)

In the following table, the Percentiles column shows the percent sidechain outliers of the chain as a percentile score with respect to all X-ray entries followed by that with respect to entries of similar resolution.

The Analysed column shows the number of residues for which the sidechain conformation was analysed, and the total number of residues.

Mol	Chain	Analysed	Rotameric	Outliers	Percentiles	
1	A	381/390 (98%)	376 (99%)	5 (1%)	69	65
1	B	379/390 (97%)	377 (100%)	2 (0%)	88	88
1	C	382/390 (98%)	376 (98%)	6 (2%)	62	58
1	D	383/390 (98%)	379 (99%)	4 (1%)	76	74
1	E	379/390 (97%)	378 (100%)	1 (0%)	92	92
1	F	381/390 (98%)	377 (99%)	4 (1%)	76	74

Continued on next page...

Continued from previous page...

Mol	Chain	Analysed	Rotameric	Outliers	Percentiles
All	All	2285/2340 (98%)	2263 (99%)	22 (1%)	78 74

All (22) residues with a non-rotameric sidechain are listed below:

Mol	Chain	Res	Type
1	A	12	GLU
1	A	97	ASP
1	A	171	ARG
1	A	298	GLU
1	A	333	ARG
1	B	333	ARG
1	B	360	LEU
1	C	114	LYS
1	C	196	GLU
1	C	221	GLN
1	C	333	ARG
1	C	364	GLU
1	C	433	PHE
1	D	310[A]	ILE
1	D	310[B]	ILE
1	D	333	ARG
1	D	414	GLU
1	E	333	ARG
1	F	332	LEU
1	F	333	ARG
1	F	417	ASP
1	F	433	PHE

Sometimes sidechains can be flipped to improve hydrogen bonding and reduce clashes. All (21) such sidechains are listed below:

Mol	Chain	Res	Type
1	A	81	ASN
1	A	302	ASN
1	A	344	ASN
1	B	297	GLN
1	B	302	ASN
1	B	344	ASN
1	C	5	GLN
1	C	81	ASN
1	C	297	GLN
1	C	302	ASN

Continued on next page...

Continued from previous page...

Mol	Chain	Res	Type
1	C	344	ASN
1	D	81	ASN
1	D	201	ASN
1	D	348	GLN
1	E	81	ASN
1	E	297	GLN
1	F	5	GLN
1	F	297	GLN
1	F	302	ASN
1	F	344	ASN
1	F	348	GLN

5.3.3 RNA (i)

There are no RNA molecules in this entry.

5.4 Non-standard residues in protein, DNA, RNA chains (i)

There are no non-standard protein/DNA/RNA residues in this entry.

5.5 Carbohydrates (i)

There are no monosaccharides in this entry.

5.6 Ligand geometry (i)

Of 53 ligands modelled in this entry, 32 are monoatomic - leaving 21 for Mogul analysis.

In the following table, the Counts columns list the number of bonds (or angles) for which Mogul statistics could be retrieved, the number of bonds (or angles) that are observed in the model and the number of bonds (or angles) that are defined in the Chemical Component Dictionary. The Link column lists molecule types, if any, to which the group is linked. The Z score for a bond length (or angle) is the number of standard deviations the observed value is removed from the expected value. A bond length (or angle) with $|Z| > 2$ is considered an outlier worth inspection. RMSZ is the root-mean-square of all Z scores of the bond lengths (or angles).

Mol	Type	Chain	Res	Link	Bond lengths			Bond angles		
					Counts	RMSZ	$\#\|Z\| > 2$	Counts	RMSZ	$\#\|Z\| > 2$
4	FMT	A	2600	-	2,2,2	0.63	0	1,1,1	0.07	0
3	PLP	C	501	1	15,15,16	0.90	1 (6%)	20,22,23	1.51	6 (30%)

Mol	Type	Chain	Res	Link	Bond lengths			Bond angles		
					Counts	RMSZ	$\#\|Z\| > 2$	Counts	RMSZ	$\#\|Z\| > 2$
5	ACY	E	2519	-	3,3,3	1.21	0	3,3,3	1.66	1 (33%)
4	FMT	D	2580	-	2,2,2	0.62	0	1,1,1	0.05	0
3	PLP	E	502	1	15,15,16	0.93	0	20,22,23	1.48	6 (30%)
4	FMT	C	2610	-	2,2,2	0.62	0	1,1,1	0.07	0
4	FMT	D	2570	-	2,2,2	0.62	0	1,1,1	0.06	0
4	FMT	F	2640	-	2,2,2	0.62	0	1,1,1	0.07	0
4	FMT	B	2650	-	2,2,2	0.63	0	1,1,1	0.08	0
3	PLP	B	500	1	15,15,16	0.85	0	20,22,23	1.44	4 (20%)
3	PLP	D	501	1	15,15,16	0.92	0	20,22,23	1.48	6 (30%)
4	FMT	F	2590	-	2,2,2	0.62	0	1,1,1	0.05	0
4	FMT	E	2620	-	2,2,2	0.62	0	1,1,1	0.09	0
4	FMT	F	2660	-	2,2,2	0.62	0	1,1,1	0.06	0
4	FMT	A	2550	-	2,2,2	0.62	0	1,1,1	0.05	0
4	FMT	A	2560	-	2,2,2	0.61	0	1,1,1	0.05	0
6	PEG	E	2833	-	6,6,6	0.52	0	5,5,5	0.47	0
4	FMT	F	2670	-	2,2,2	0.63	0	1,1,1	0.05	0
3	PLP	A	500	1	15,15,16	0.92	0	20,22,23	1.47	6 (30%)
3	PLP	F	502	1	15,15,16	0.84	0	20,22,23	1.46	5 (25%)
4	FMT	D	2630	-	2,2,2	0.62	0	1,1,1	0.07	0

In the following table, the Chirals column lists the number of chiral outliers, the number of chiral centers analysed, the number of these observed in the model and the number defined in the Chemical Component Dictionary. Similar counts are reported in the Torsion and Rings columns. '-' means no outliers of that kind were identified.

Mol	Type	Chain	Res	Link	Chirals	Torsions	Rings
3	PLP	B	500	1	-	0/6/6/8	0/1/1/1
3	PLP	A	500	1	-	0/6/6/8	0/1/1/1
3	PLP	C	501	1	-	0/6/6/8	0/1/1/1
3	PLP	D	501	1	-	0/6/6/8	0/1/1/1
3	PLP	F	502	1	-	0/6/6/8	0/1/1/1
3	PLP	E	502	1	-	0/6/6/8	0/1/1/1
6	PEG	E	2833	-	-	0/4/4/4	-

All (1) bond length outliers are listed below:

Mol	Chain	Res	Type	Atoms	Z	Observed(Å)	Ideal(Å)
3	C	501	PLP	C5-C4	2.20	1.42	1.40

All (34) bond angle outliers are listed below:

Mol	Chain	Res	Type	Atoms	Z	Observed(^{o})	Ideal(^{o})
3	C	501	PLP	C4A-C4-C5	3.18	124.21	120.94
3	E	502	PLP	C4A-C4-C5	3.04	124.07	120.94
3	A	500	PLP	C4A-C4-C5	2.99	124.02	120.94
3	D	501	PLP	C4A-C4-C5	2.89	123.92	120.94
3	F	502	PLP	C4A-C4-C5	2.84	123.86	120.94
3	B	500	PLP	C4A-C4-C5	2.71	123.72	120.94
3	F	502	PLP	C6-N1-C2	2.58	123.95	119.17
3	C	501	PLP	C6-N1-C2	2.56	123.92	119.17
3	B	500	PLP	C6-N1-C2	2.54	123.87	119.17
3	D	501	PLP	C6-N1-C2	2.52	123.84	119.17
3	A	500	PLP	C6-N1-C2	2.48	123.77	119.17
3	E	502	PLP	C6-N1-C2	2.48	123.76	119.17
3	A	500	PLP	C3-C2-N1	-2.48	117.56	120.77
3	D	501	PLP	C3-C2-N1	-2.47	117.58	120.77
3	E	502	PLP	C3-C2-N1	-2.46	117.59	120.77
3	B	500	PLP	C3-C2-N1	-2.45	117.61	120.77
3	F	502	PLP	C3-C2-N1	-2.39	117.68	120.77
3	C	501	PLP	C3-C2-N1	-2.38	117.69	120.77
5	E	2519	ACY	O-C-CH3	-2.28	113.44	122.33
3	D	501	PLP	C2A-C2-C3	2.16	123.56	120.89
3	C	501	PLP	C2A-C2-C3	2.16	123.55	120.89
3	C	501	PLP	O3P-P-O1P	2.14	119.07	110.68
3	C	501	PLP	C4A-C4-C3	-2.14	116.87	120.50
3	D	501	PLP	O3P-P-O1P	2.13	119.02	110.68
3	E	502	PLP	C2A-C2-C3	2.12	123.50	120.89
3	A	500	PLP	C2A-C2-C3	2.11	123.49	120.89
3	B	500	PLP	C2A-C2-C3	2.10	123.49	120.89
3	F	502	PLP	C2A-C2-C3	2.10	123.49	120.89
3	E	502	PLP	C4A-C4-C3	-2.07	117.00	120.50
3	D	501	PLP	C4A-C4-C3	-2.06	117.00	120.50
3	A	500	PLP	O3P-P-O1P	2.06	118.74	110.68
3	E	502	PLP	O3P-P-O1P	2.05	118.71	110.68
3	A	500	PLP	C4A-C4-C3	-2.05	117.03	120.50
3	F	502	PLP	O3P-P-O1P	2.03	118.65	110.68

There are no chirality outliers.

There are no torsion outliers.

There are no ring outliers.

8 monomers are involved in 9 short contacts:

Mol	Chain	Res	Type	Clashes	Symm-Clashes
3	C	501	PLP	1	0

Continued on next page...

Continued from previous page...

Mol	Chain	Res	Type	Clashes	Symm-Clashes
5	E	2519	ACY	1	0
3	E	502	PLP	1	0
3	B	500	PLP	1	0
3	D	501	PLP	1	0
4	A	2550	FMT	1	0
3	A	500	PLP	2	0
3	F	502	PLP	1	0

5.7 Other polymers (i)

There are no such residues in this entry.

5.8 Polymer linkage issues (i)

There are no chain breaks in this entry.

6 Fit of model and data (i)

6.1 Protein, DNA and RNA chains (i)

In the following table, the column labelled '#RSRZ> 2' contains the number (and percentage) of RSRZ outliers, followed by percent RSRZ outliers for the chain as percentile scores relative to all X-ray entries and entries of similar resolution. The OWAB column contains the minimum, median, 95th percentile and maximum values of the occupancy-weighted average B-factor per residue. The column labelled 'Q< 0.9' lists the number of (and percentage) of residues with an average occupancy less than 0.9.

Mol	Chain	Analysed	<RSRZ>	#RSRZ>2			OWAB(Å^2)	Q<0.9
1	A	452/466 (96%)	0.46	20 (4%)	34	44	12, 18, 29, 43	0
1	B	451/466 (96%)	0.47	23 (5%)	28	37	11, 18, 30, 42	0
1	C	454/466 (97%)	0.55	21 (4%)	32	42	12, 19, 31, 48	0
1	D	454/466 (97%)	0.52	31 (6%)	17	25	10, 18, 30, 46	0
1	E	450/466 (96%)	0.49	23 (5%)	28	37	12, 18, 29, 40	0
1	F	454/466 (97%)	0.51	24 (5%)	26	35	11, 18, 30, 45	0
All	All	2715/2796 (97%)	0.50	142 (5%)	27	37	10, 18, 30, 48	0

All (142) RSRZ outliers are listed below:

Mol	Chain	Res	Type	RSRZ
1	A	454	LEU	7.7
1	C	454	LEU	7.2
1	D	455	GLN	5.8
1	D	307	GLY	5.7
1	E	3	LYS	5.6
1	C	455	GLN	5.6
1	C	453	LYS	5.5
1	C	307	GLY	5.5
1	D	114	LYS	5.4
1	D	453	LYS	5.2
1	D	3	LYS	5.1
1	C	385	GLY	5.0
1	D	385	GLY	5.0
1	A	385	GLY	4.9
1	E	307	GLY	4.8
1	F	384	ASP	4.7
1	D	454	LEU	4.7
1	C	306	LEU	4.6
1	D	308	GLY	4.5

Continued on next page...

Continued from previous page...

Mol	Chain	Res	Type	RSRZ
1	A	452	PRO	4.4
1	D	4	LYS	4.4
1	F	4	LYS	4.4
1	F	454	LEU	4.4
1	B	452	PRO	4.3
1	E	4	LYS	4.2
1	D	384	ASP	4.1
1	F	453	LYS	4.1
1	E	452	PRO	4.1
1	B	114	LYS	4.1
1	E	114	LYS	4.0
1	C	456	GLY	4.0
1	D	456	GLY	3.9
1	B	3	LYS	3.9
1	F	456	GLY	3.9
1	F	387	ASP	3.9
1	A	387	ASP	3.8
1	B	417	ASP	3.8
1	C	3	LYS	3.8
1	B	453	LYS	3.8
1	B	384	ASP	3.6
1	E	387	ASP	3.6
1	A	114	LYS	3.6
1	A	307	GLY	3.4
1	F	114	LYS	3.3
1	F	307	GLY	3.3
1	B	418	ILE	3.3
1	C	310	ILE	3.3
1	C	54	GLY	3.2
1	B	385	GLY	3.2
1	D	387	ASP	3.1
1	F	417	ASP	3.1
1	A	453	LYS	3.1
1	F	452	PRO	3.1
1	E	385	GLY	3.1
1	F	3	LYS	3.1
1	A	384	ASP	3.1
1	A	386	GLU	3.0
1	A	306	LEU	3.0
1	D	386	GLU	3.0
1	D	113	PRO	3.0
1	E	308	GLY	3.0

Continued on next page...

Continued from previous page...

Mol	Chain	Res	Type	RSRZ
1	D	452	PRO	3.0
1	D	304	ASP	3.0
1	C	198	CYS	2.9
1	A	5	GLN	2.9
1	C	309	GLN	2.9
1	F	386	GLU	2.9
1	E	310	ILE	2.9
1	B	387	ASP	2.9
1	D	441	TYR	2.8
1	C	452	PRO	2.8
1	D	309	GLN	2.8
1	A	417	ASP	2.8
1	E	306	LEU	2.8
1	F	304	ASP	2.8
1	B	139	TRP	2.8
1	C	184	PRO	2.7
1	E	309	GLN	2.7
1	C	114	LYS	2.7
1	F	125	GLY	2.7
1	F	455	GLN	2.7
1	E	54	GLY	2.7
1	F	5	GLN	2.7
1	F	7	THR	2.7
1	B	4	LYS	2.6
1	D	417	ASP	2.6
1	F	385	GLY	2.6
1	D	292	GLU	2.6
1	C	413	GLY	2.6
1	A	3	LYS	2.6
1	B	297	GLN	2.6
1	C	386	GLU	2.6
1	B	416	THR	2.6
1	B	131[A]	MET	2.5
1	E	388	PRO	2.5
1	C	387	ASP	2.5
1	B	132	LEU	2.5
1	A	116	GLY	2.4
1	E	417	ASP	2.4
1	B	5	GLN	2.4
1	A	304	ASP	2.4
1	C	441	TYR	2.4
1	D	310[A]	ILE	2.4

Continued on next page...

Continued from previous page...

Mol	Chain	Res	Type	RSRZ
1	E	292	GLU	2.4
1	B	441	TYR	2.4
1	F	308	GLY	2.4
1	F	297	GLN	2.3
1	B	206	VAL	2.3
1	D	34	LEU	2.3
1	F	306	LEU	2.3
1	B	386	GLU	2.3
1	C	384	ASP	2.3
1	D	297	GLN	2.3
1	D	5	GLN	2.2
1	D	129	ALA	2.2
1	A	348	GLN	2.2
1	A	361	GLY	2.2
1	E	125	GLY	2.2
1	A	305	TYR	2.2
1	A	388	PRO	2.2
1	B	129	ALA	2.2
1	F	414	GLU	2.2
1	C	63	PHE	2.2
1	E	451	HIS	2.2
1	D	31	ARG	2.2
1	B	308	GLY	2.1
1	B	184	PRO	2.1
1	E	304	ASP	2.1
1	E	116	GLY	2.1
1	E	413	GLY	2.1
1	F	451	HIS	2.1
1	E	8	ASP	2.1
1	F	293	GLU	2.1
1	E	361	GLY	2.1
1	B	31	ARG	2.0
1	D	139[A]	TRP	2.0
1	E	257	ASP	2.0
1	D	115	ASN	2.0
1	D	116	GLY	2.0
1	D	311	GLY	2.0
1	D	302	ASN	2.0
1	A	424	MET	2.0

6.2 Non-standard residues in protein, DNA, RNA chains (i)

There are no non-standard protein/DNA/RNA residues in this entry.

6.3 Carbohydrates (i)

There are no monosaccharides in this entry.

6.4 Ligands (i)

In the following table, the Atoms column lists the number of modelled atoms in the group and the number defined in the chemical component dictionary. The B-factors column lists the minimum, median, 95th percentile and maximum values of B factors of atoms in the group. The column labelled 'Q< 0.9' lists the number of atoms with occupancy less than 0.9.

Mol	Type	Chain	Res	Atoms	RSCC	RSR	B-factors(Å^2)	Q<0.9
4	FMT	A	2560	3/3	0.64	0.20	31,31,31,31	0
6	PEG	E	2833	7/7	0.70	0.33	44,45,45,45	0
2	IOD	A	2349	1/1	0.75	0.09	97,97,97,97	1
4	FMT	D	2580	3/3	0.76	0.24	29,29,29,29	0
4	FMT	F	2660	3/3	0.79	0.17	30,30,30,30	0
2	IOD	C	2351	1/1	0.79	0.11	53,53,53,53	1
4	FMT	F	2670	3/3	0.80	0.12	27,27,28,28	0
4	FMT	B	2650	3/3	0.88	0.17	30,30,30,31	0
4	FMT	F	2590	3/3	0.90	0.17	33,33,33,33	0
2	IOD	E	2353	1/1	0.91	0.09	50,50,50,50	1
4	FMT	A	2600	3/3	0.91	0.13	28,28,28,28	0
5	ACY	E	2519	4/4	0.92	0.17	33,33,33,33	0
4	FMT	D	2570	3/3	0.93	0.20	28,28,28,28	0
4	FMT	F	2640	3/3	0.93	0.11	29,29,29,30	0
4	FMT	D	2630	3/3	0.93	0.14	29,29,30,30	0
2	IOD	F	2360	1/1	0.94	0.10	43,43,43,43	1
3	PLP	A	500	15/16	0.94	0.13	17,18,18,18	0
3	PLP	D	501	15/16	0.94	0.16	15,15,16,16	0
2	IOD	B	2350	1/1	0.94	0.12	78,78,78,78	1
2	IOD	F	2354	1/1	0.94	0.06	90,90,90,90	1
2	IOD	D	2362	1/1	0.95	0.05	49,49,49,49	1
3	PLP	F	502	15/16	0.95	0.13	16,16,17,17	0
4	FMT	A	2550	3/3	0.95	0.15	26,26,26,27	0
3	PLP	B	500	15/16	0.95	0.13	16,16,16,16	0
3	PLP	C	501	15/16	0.95	0.12	16,17,17,18	0
3	PLP	E	502	15/16	0.96	0.12	16,16,17,17	0
2	IOD	C	2339	1/1	0.96	0.05	38,38,38,38	1

Continued on next page...

Continued from previous page...

Mol	Type	Chain	Res	Atoms	RSCC	RSR	B-factors(Å^2)	Q<0.9
4	FMT	E	2620	3/3	0.96	0.14	23,23,24,24	0
2	IOD	A	2361	1/1	0.96	0.06	39,39,39,39	1
2	IOD	D	2358	1/1	0.96	0.06	45,45,45,45	1
2	IOD	A	2337	1/1	0.96	0.04	36,36,36,36	1
2	IOD	B	2356	1/1	0.96	0.11	53,53,53,53	1
4	FMT	C	2610	3/3	0.96	0.09	23,23,23,23	0
2	IOD	E	2359	1/1	0.96	0.08	49,49,49,49	1
2	IOD	B	2338	1/1	0.97	0.05	35,35,35,35	1
2	IOD	F	2348	1/1	0.97	0.06	42,42,42,42	1
2	IOD	D	2340	1/1	0.97	0.05	30,30,30,30	1
2	IOD	E	2341	1/1	0.97	0.04	37,37,37,37	1
2	IOD	D	2352	1/1	0.97	0.09	76,76,76,76	1
2	IOD	C	2357	1/1	0.98	0.07	54,54,54,54	1
2	IOD	A	2355	1/1	0.98	0.07	48,48,48,48	1
2	IOD	E	2347	1/1	0.98	0.08	50,50,50,50	1
2	IOD	C	2345	1/1	0.98	0.06	45,45,45,45	1
2	IOD	B	2344	1/1	0.98	0.08	39,39,39,39	1
2	IOD	F	2342	1/1	0.98	0.04	34,34,34,34	1
2	IOD	D	2346	1/1	0.99	0.07	41,41,41,41	1
2	IOD	D	2334	1/1	0.99	0.05	24,24,24,24	0
2	IOD	F	2336	1/1	0.99	0.04	25,25,25,25	0
2	IOD	A	2343	1/1	0.99	0.07	47,47,47,47	1
2	IOD	B	2332	1/1	1.00	0.05	24,24,24,24	0
2	IOD	E	2335	1/1	1.00	0.03	20,20,20,20	1
2	IOD	B	2333	1/1	1.00	0.04	22,22,22,22	0
2	IOD	A	2331	1/1	1.00	0.04	20,20,20,20	0

6.5 Other polymers (i)

There are no such residues in this entry.